ANALYSIS OF REINFORCED CONCRETE FLOOR SLABS FOR STORM SHELTERS

by

NAVIN KISHINCHAND GALANI, B.E.Civil

A THESIS

IN

CIVIL ENGINEERING

Submitted to the Graduate Faculty
of Texas Tech University in
Partial Fulfillment of
the Requirements for
the Degree of

MASTER OF SCIENCE

IN

CIVIL ENGINEERING

Approved

Ernst W. Kiesling
Chairperson of the Committee

Andrew Budek

Accepted

John Borrelli
Dean of the Graduate School

August, 2005

ACKNOWLEDGEMENTS

I am extremely thankful to Dr. Ernst W. Kiesling for giving me the opportunity to work under him as a research assistant. It was under his guidance and supervision that I was able to successfully accomplish all my research tasks. His timely appreciation of my work was a great source of encouragement. I would also like to thank Dr. Andrew Budek for his valuable advice during the course of my thesis. He closely monitored my research work and provided useful suggestions towards making it a comprehensive thesis.

I thank, Dr. Scott Phelan for providing all the facilities, required for my research work. I also appreciate the technical assistance provided by Mr. Mohammed Zain and Mr. Justin Davidson at various stages of the thesis.

I will always be grateful to my parents Mrs. Maya K. Galani and Mr. Kishin V. Galani, and brother Jitu for their support through all these years of my existence. It is their immense love and affection that keeps me motivated in every sphere of life.

TABLE OF CONTENTS

ABSTRACT

On-grade concrete floor slabs are very important structural components of above ground storm shelters. A structurally sound floor slab is required to ensure sufficient support for the shelter during an extreme wind event.

In this research an analytical approach has been followed to understand the flexural behavior of the floor slab during an F5-tornado. The slab is assumed to support a storm shelter (8'x 4'x 8' and 8'x 8'x 8') that is subjected to wind having 250 mph 3-sec gust ground level wind speed. ALGOR finite element analysis package was used to model the concrete floor slab and simulate the required field conditions. Moment-carrying capacity of uncracked reinforced concrete slab and its reserve flexural strength after cracking were used to monitor the stress levels in the slab. Based on this analysis, design provisions (slab thickness and steel reinforcement) are suggested for the selected slab-shelter configurations. Also, the slab material at the slab-shelter connection was checked for strength against the maximum pullout force transferred by the anchor bolt. It can be concluded that this analytical procedure provides a useful tool in designing floor slabs for storm shelters.

LIST OF TABLES

LIST OF FIGURES

CHAPTER I

INTRODUCTION

Extreme wind events such as tornadoes and hurricanes are some of the natural destructive forces over which human beings have no control. The best thing we can do is to find ways to mitigate their effects. We can use satellite imageries and weather radars to forecast and track major wind events, in order to develop an effective warning system. Another way of ensuring human safety is to build shelters that are safe against the violent flows of air.

In United States of America; one of the countries that is greatly affected by tornadoes and hurricanes, extensive research is being carried out in the fields of wind engineering and storm shelters. Above ground, in-residence storm shelters are gaining popularity, because of their easy accessibility and good level of occupant protection from injury or loss of life. The basic principle behind the design of such shelters is to provide structural stability against the extreme wind forces and to prevent the breach of the walls and roof by the flying debris. Texas Tech University has been actively involved in the development of such shelters since 1970, when an F5 tornado caused severe damage to the City of Lubbock [1]. The research carried out at Texas Tech University involves analysis and design of all structural components of storm shelters subjected to extreme wind loads. Missile tests are also carried out to ensure the hardness of shelter envelope against perforation.

Understanding the characteristics of wind during a storm is very important, in order to ascertain the effects of extreme winds on the storm shelters. The characteristics of hurricanes and tornadoes and their effects on buildings are explained in the subsequent paragraphs.

1.1 Extreme wind events

Wind is defined as the movement of air, caused basically by the pressure difference in the atmosphere and the forces generated by the rotation of earth. The wind flow becomes turbulent due to the friction with the earth's surface at ground level. At higher levels, turbulence is caused by the movement of air in opposite directions. Turbulence is the most important characteristic of hurricanes and tornadoes.

Under favorable atmospheric conditions, latent heat of the tropical oceans causes moist air to rise and develop into a cloud that grows in vertical direction. Due to evaporation, the temperature of moist air within the cloud lowers and causes condensation, resulting in heavy rains. Strong wind produced during such a phenomenon moves rapidly towards the ground and is generally accompanied by lightening and thunder. Such a local storm produced by a cumulonimbus cloud is called a thunderstorm. Usually during late summer and autumn, a group of such thunderstorms come together, to form a complex tropical wave. If such a tropical wave stays over warm water, it continues to increase in size. Further under the influence of pressure difference and other factors such as the forces caused by earth's rotation, the wind within the wave starts spiraling in a counter-clockwise direction. A closed circulation of wind is formed

resulting in a tropical depression, which in turn causes increase in wind speed. When the sustained wind speed of the storm reaches 40 mph (64 km/hr) the storm is called tropical storm. If a tropical storm grows in size and reaches a sustained wind speed of 74 mph (119 km/hr) it is called a hurricane. Trade winds are responsible for hurricanes to come toward land. Hurricanes are characterized by strong straight line winds, stretching over a wide area and accompanied by heavy rains. Also during their movement toward shore they sweep the ocean water towards land, causing storm surge. Thus flooding is common during a hurricane due to both heavy rain and storm surge. Figure 1.1 shows the satellite image of Hurricane Ivan after it made landfall, on September 16, 2004.

Figure 1.1: Satellite Image of Hurricane Ivan [24].

In the United States hurricanes have caused great destruction in the past, especially in the states of Florida and Texas. In 1969 Robert Simpson and Herbert Saffir proposed five categories of hurricanes, based on the damage inflicted by a hurricane. Table 1.1 shows the Saffir-Simpson Hurricane Scale.

Table 1.1: Saffir-Simpson scale.
Source: National Hurricane Center (US) and FEMA 361, 2000.

Hurricane category	1-minute average wind speed (mph)	3-sec. gust wind speed (mph)	Damage intensity	Effects
C1	74-95	90-116	Minimal	Damage is done primarily to shrubbery and trees; unanchored mobile homes are damaged; no real damage is done to structures.
C2	96-110	117-134	Moderate	Some trees are toppled; some roof coverings are damaged; major damage is done to mobile homes.
C3	111-130	135-158	Extensive	Large trees are toppled; some structural damage is done to roofs; mobile homes are destroyed; structural damage is done to small homes and utility buildings.
C4	131-155	159-189	Extreme	Extensive damage is done to roofs, windows, and doors; roof systems on small buildings completely fail; some curtain walls fail.
C5	greater than 155	greater than 189	Catastrophic	Roof damage is considerable and widespread; window and door damage is severe; there are extensive glass failures; some complete buildings fail.

The table provides an estimate of potential damage to the property during a hurricane. The 3-sec gust wind speeds as mentioned in the table are calculated from the 1-minute average wind speed using the Durst curve (multiplying factor = 1.22) [2].

Tornadoes are devastating and violent storms that can cause huge damage in a matter of a few seconds. They occur more frequently in the central plains of countries like United States, Argentina, Russia, and South Africa [3]. A tornado is formed during a hot summer day under conducive atmospheric conditions. Initiated by the heating of earth, hot humid air rises up and mixes with the cold drier air. The mixing results in the formation of thunderstorm in the lower atmosphere. As rising air within the thunderstorm moves upward, the storm starts rotating vigorously as it meets varying wind directions at different altitudes. A huge rotating column of air extending from the ground to the thunderstorm having wind speeds (at the edge of rotating wind column) of the order of 250 mph and accompanied by a huge wall of cloud is formed, as shown in Figure 1.2. Tornadoes become visible when loaded with dust and debris.

Figure 1.2: A typical tornado, moving with its cloud wall [25].

T. Theodore Fujita developed the classification of tornadoes, based on the amount and type of damage caused by a tornado. Table 1.2 shows the Fujita scale.

Table 1.2: Fujita tornado damage scale.
Source: FEMA 361, 2000 and National Oceanic and Atmospheric Administration (NOAA).

Tornado category	Maximum wind speed (mph)	Damage intensity	Effects
F0	less than 73	Light	Chimneys are damaged; tree branches are broken; shallow rooted trees are toppled.
F1	73-112	Moderate	Roof surfaces are peeled off; windows are broken; some tree trunks are snapped; unanchored mobile homes are overturned; attached garages may be destroyed.
F2	113-157	Considerable	Roof structures are damaged; mobile homes are destroyed; debris becomes airborne (missiles are generated); large trees are snapped or uprooted.
F3	158-206	Severe	Roofs and small walls are torn from structures; some buildings are destroyed; non-reinforced masonry buildings are destroyed; most trees in forest are uprooted.
F4	207-260	Devastating	Well-constructed houses are destroyed; some structures are lifted from foundations and blown some distance; cars are blown some distance; large debris becomes airborne
F5	greater than 260	Incredible	Strong frame houses are lifted from foundations; reinforced concrete structures are damaged; automobile sized missiles become airborne; trees are completely debarked.

Recent studies [19] have resulted in reassessment of the wind speeds associated with the higher category of tornadoes. Post-storm damage documentation studies conducted by Texas Tech University researchers have led them to conclude that maximum ground-level wind speeds during an extreme case of tornado are approximately 200 mph.

Wind engineering and fluid mechanics play very important roles to understand the wind flow pattern of hurricanes and tornadoes and define the forces acting on a structure or a building. In order to compute design wind loads for a building in a particular region, it is very important to establish the maximum expected wind speeds for each region.

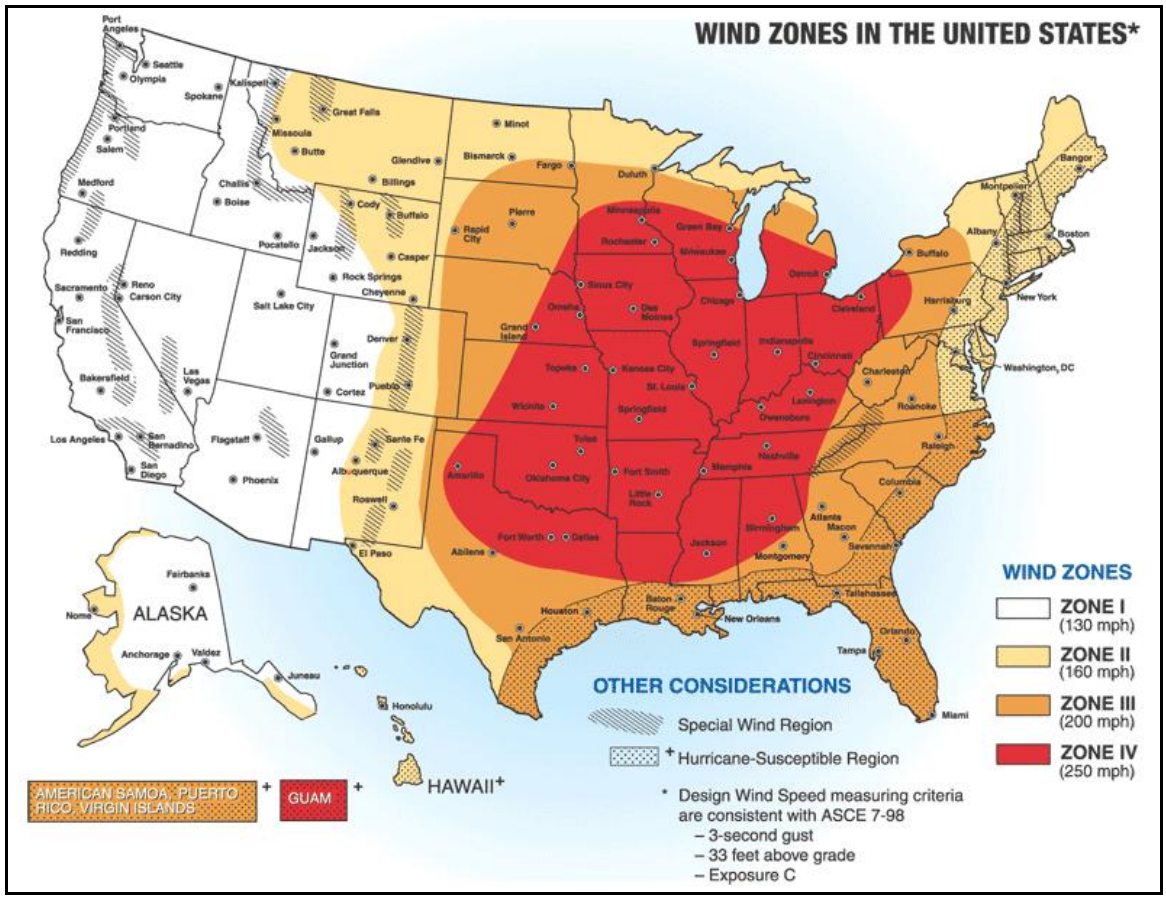

Figure 1.3: Wind Zones in the United States [5].

On the basis of 40 years of tornado history and more than 100 years of hurricane history, the Federal Emergency Management Agency (FEMA) has developed wind zones in the United States. The wind zones map as shown in Figure 1.3, divides United Sates into four zones, based on the design 3-sec gust wind speed that is consistent with ASCE 7-98. These zones geographically reflect the number and strength of extreme windstorms that have occurred.

1.2 Effects of wind on buildings

Building a safe and structurally sound shelter is the main objective of a structural engineer. It is very important to understand the response of storm shelters under extreme wind conditions so that they can be designed to withstand wind loads. Wind tunnel tests can be carried out to simulate extreme wind events and compute the wind pressures acting on buildings of different shapes and sizes. Effects of tornadoes and hurricanes on buildings are complex and thus require good understanding of wind flow pattern during their occurrence.

Since tornadoes are debris-laden winds with large pressure variations within their bodies, they cause structural failure by three main forces [4]:

1. Wind pressure due to wind flow around the building.
2. Wind pressure due to atmospheric pressure difference.
3. Impact forces induced by flying debris (missiles).

Wind pressure due to wind flow around a building is explained using Figure 1.4. The windward face of the building experiences positive pressure (towards the wall) due to incident wind flow. At the edges of the building (on the side walls and roof) wind flow converges and its increased velocity causes decrease in the pressure. Thus these surfaces are subjected to suction that is maximum near the separation edges. Beyond the separation edges the flow starts diverging and thus positive pressure increases. Eddies formed on the leeward face of the building cause negative pressure on that surface.

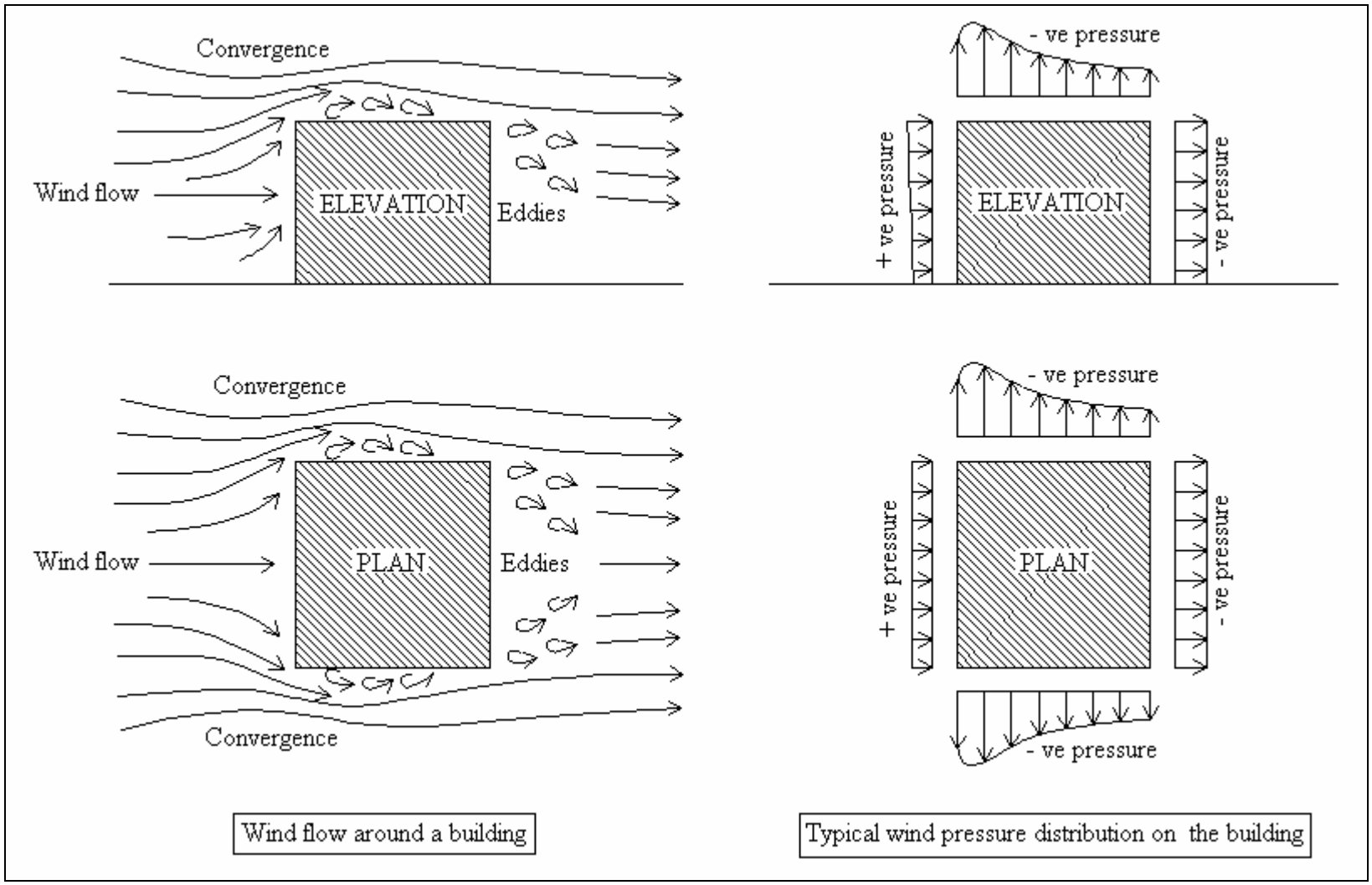

Figure 1.4: Wind pressure due to wind flow around the building.

The atmospheric pressure at the center of a tornado is extremely low as compared to the ambient pressure inside the building that lies in its path. Such a pressure difference produces outward-acting pressures on the building envelope. Sufficient openings in the building envelope can help to reduce this pressure difference. But if the opening is on the windward side, wind entering the structure will introduce internal pressure which will add to the pressure exerted by wind flow around the building. Thus buildings are designed for two cases: (1) Enclosed and (2) Partially enclosed.

The flying debris in the form of wooden planks, steel rods, 2 x 4 wood pieces etc., possess very high kinetic energy and are capable of perforating the building envelope. Once the envelope is breached the wind moves inside the building to increase outward pressures on the walls and roof. Also, the debris entering the building with the wind is one of the main causes of human injury or death. Figure 1.5, shows the different types of debris generated during an F5 tornado.

Figure 1.5: Types of debris generated during an F5 tornado [26].

Hurricanes are essentially straight-line winds accompanied by torrential rains and floods. Structural failure during a hurricane can be contributed to the following two forces:

1. Wind pressure due to wind flow around the structure.
2. Impact forces induced by flying debris (missiles).
3. Hydraulic pressure due to submergence in flood water.

Forces due to wind flow around the structure and flying debris are same as that explained for tornadoes. The floods are dynamic in nature and thus apart from the hydrostatic loads the building shall also experience hydrodynamic loads, and wave loads.

Structural integrity is a vital factor while considering occupant safety. Thus to serve as a storm shelter, it is necessary that a structure is stiffened in such a way that it is not affected by the disturbances caused by a tornado or hurricane. Only then can a building effectively serve the purpose of an above ground storm shelter.

1.3 Above ground, in-residence storm shelters

The concept of an above ground in-residence storm shelter evolved from the findings that a small interior room survives a major tornado or hurricane. While it is prohibitively expensive to make the whole building safe against extreme winds, a small interior room such as a bathroom or closet that is easily accessible from all other rooms of the house can economically be constructed as a storm-resistant unit. Properly designed and constructed, this windowless room resists the forces caused by a tornado and provides occupant safety, even if the remaining house gets damaged or destroyed. Easy accessibility favors an above ground in-residence storm shelter over a community shelter or a cellar. Apart from serving as a storm shelter such units have a daily functional use such as bathroom, closet, utility room, or interior passage. Basements with concrete roofs are excellent storm shelters but are very costly and are difficult to construct in an existing house [6].

Figure 1.6: An interior stairway and adjacent small rooms survived the F5 tornado [26].

Storm shelter design is one of the prime research areas in Texas Tech University. Extensive work is being done to develop protocols for analysis, design, and development of such shelters. Different types of materials such as Concrete Masonry Units (CMU), Reinforced Concrete (RC), and timber have been tested for extreme loads. Size limits have also been defined for each type of construction. Debris impact testing done at the Texas Tech University covers the testing of different wall surfaces against the impact of missiles fired at a specified speed to simulate flying debris. Anchorage of storm shelter to the floor slab is an important part of the structural design.

Cost is one of the major concerns while designing such a shelter. The research work is aimed at constructing a shelter made from locally available materials, familiar construction technology, and of size sufficient enough to ensure free movement of all occupants expected within such room.

1.4 Objectives and scope of study

The on-grade floor slab is a very important structural unit of a storm shelter that transfers all the loads coming from the super-structure to the sub-structure (soil). An efficient anchorage of the shelter to the floor slab ensures effective transfer of forces to the slab. The slab has to be further designed in such a way that it provides a proper flow of forces to the soil beneath.

The object of this research work was to establish design stipulations for the concrete floor slab that is required to support storm shelters. To achieve this objective the following things were required:

1. A mathematical model that simulates field conditions of loads and structural response.
2. A valid procedure for flexural analysis of slabs.

The loads on the shelter were computed in accordance with FEMA 361 and ASCE 7-02. Wind speed associated with F5 tornadoes was considered in all cases. This means that a design wind speed of 250 mph was used to compute the forces acting on the shelter. Based on materials used the following storm shelter cases were considered:

1. Concrete masonry unit (C.M.U.) shelter.
2. Reinforced concrete (R.C.) shelter.
3. Timber frame shelter (sheathing of plywood and steel).

Shelter sizes of 8’ x 4’ x 8’ and 8’ x 8’ x 8’ (B (ft) x L (ft) x h (ft)) were tested. ALGOR-finite element analysis software was used to model and analyze the slab.

CHAPTER II

AN OVERVIEW OF STORM SHELTER DEVELOPMENT

2.1 History of storm shelters

Every new research starts with the initiation of an idea, based on the facts available. On May 11, 1970, one of the most powerful tornadoes in the history of United States ripped through downtown Lubbock, Texas. The tornado claimed 26 lives, injured more than 500 people, and caused more than $100 million in damage [6]. This F5 tornado left behind sufficient evidences required to disprove the general belief that a tornado-resistant structure could not be designed. Before this event, it was thought that the wind speeds during a F5 tornado could exceed 600 mph and that it was impractical to design a structure for such wind speeds. A thorough survey of the damaged site and subsequent engineering analysis convinced the researchers that wind speeds during a tornado could reach up to a maximum of 300 mph at some height [1]. However the ground-level wind speeds are believed to be approximately 200 mph [19]. Also during the post disaster inspection and damage assessment, researchers found that in many cases internal rooms of building were still standing. Such cases suggested that it was possible to survive during a major tornado, by reaching the interior rooms such as a closet or bathroom. Based on all these facts, Dr.Ernst W. Kiesling and David E. Goolsby put forth the concept of above ground in-residence storm shelter, in 1974 [6]. Since then Texas Tech University has been extensively involved in testing and developing a feasible and economical storm shelter.

The concept of storm shelters got national attention after the deadly tornado that hit Jarrell, Texas in 1997. In 1998, Federal Emergency Management Agency (FEMA) took the first step to publish the design aspects of small residential storm shelters. The multiple tornadoes that hit the Oklahoma and Kansas states in 1999 caused much causality and over one billion in property damage. The Federal Emergency Management Agency offered shelter incentive grants that helped start the storm shelter industry. The incentive grant program stimulated the construction of several thousand residential storm shelters, some that followed the designs of FEMA 320 and others that were prefabricated, manufactured products. Some quality issues were observed. No standard for design and construction was available [7]. To ensure proper quality control a need for developing separate standard was observed. This led to the formation of National Storm Shelter Association (NSSA) in the year 2000 and an industry standard for storm shelters. The main aim of this association is to foster quality in the shelter industry. The NSSA standard meets all design and construction criteria of FEMA 320-Taking Shelter from the Storm, FEMA 361-Design and Construction Guidance for Community Shelters, and the National Performance Criteria for Tornado Shelters [8]. In February 2003 the International Code Council (ICC) formed a committee exclusively for storm shelters that aims at developing a national consensus for storm shelters. The NSSA standards form the basic document of this committee [7]. The series of events that led to the formation of ICC/NSSA standards committee and that explain the history of storm shelter development are summarized in Table 2.1.

Table 2.1: Storm shelter history.
Source: National Storm Shelter Association (NSSA).

Event date	Event	Event-description
May-1970	Lubbock tornado	F5 tornado killed 26 people and severely damaged the city of Lubbock. Based on the damage assessment done, Texas Tech researchers found evidence that a storm resistive structure could be built.
September-1974	Conception of storm shelter	Dr.E.W.Kiesling and D.E.Goolsby presented the concept of above-ground in-residence shelter in Civil Engineering magazine.
May-1997	Jarrell, TX tornado	A small Texas community of Jarrel was hit by a F5 tornado that killed 29 people and around $20 million in damage. The devastation caused by the tornado received national attention. The news coverage highlighted the importance of storm shelter developed at Texas Tech University.
October-1998	FEMA 320	Seeing the tremendous response of people for storm shelters, a prescriptive design booklet entitled, "Taking shelter from the storm: Building a safe room inside your house" was published by FEMA.
May-1999	Oklahoma city area tornadoes	More than a dozen tornadoes displayed a furious act of terror in Oklahoma city and numerous counties of Oklahoma and Kansas. Two people survived in an above-ground, reinforced concrete shelter located in the path of the F5 tornado. Funds were released specifically to encourage and develop a storm shelter industry.
February-2000	NSSA	National Storm Shelter Association (NSSA) was formed in order to discuss and solve the issues relating to the quality of storm shelters, as faced by the storm shelter industry.
April-2001	NSSA Standards	NSSA Standard for the design, construction and performance of storm shelters was developed. The standard meets all FEMA criteria and may be updated until a national consensus standard is evolved.
February-2003	ICC/NSSA Committee on Storm Shelters	ICC/NSSA Committee on Storm Shelters (IS-STM) was formed. The end product, expected in 2007, will be an ANSI-accredited consensus standard.

2.2 Storm shelter research at Texas Tech University

The storm shelter research at Texas Tech University mainly aims at achieving the following:

1. A sound design, to ensure occupant safety.
2. An economical and feasible shelter.

Resistance against the wind forces can be achieved by providing a strong and compact structural configuration for the shelter. The economical aspect of shelter design can be achieved by using readily available material that has good resistance against debris impact. Thus the focus of research at Texas Tech University has been to find out an optimum analytical methodology for shelter design and an accurate procedure for material testing.

Texas Tech University is known for its debris impact testing facility for material testing. The most common type of debris generated in a tornado is the 2 x 4 timber pieces that are used in the structural framing of buildings. In 1973, Thomson performed drop tests with 2 x 4 pieces [1]. These missiles were guided by wires and dropped on the target surface that represented the material used for shelter. The initial tests were carried out in the laboratory for different masses of missile and with different heights of drop. To achieve greater speeds, the missiles were dropped from the top of architectural building; the tallest building in the campus at that time. The attempts to simulate the windborne missile during extreme wind events in terms of its relative speed and momentum resulted in the development of missile launch facility in 1983. Missile cannon was built under the supervision of Dr. James R. McDonald and Dr. Milton L. Smith. This missile launching

setup is capable of firing the missiles of specified weight at the required speed. Numerous tests have been carried out with different types of missile (2 x 4 boards, steel pipes, bricks, etc.) on different wall surfaces (reinforced concrete, concrete masonry units, etc.). In 1997, Carter established a relationship between the energy possessed by the missile and the damage caused by it on the test surface [11].

Based on the selection of an internal room as a storm shelter (closet, bathroom, etc.), the initial designs proposed by Texas Tech University were intended for a maximum size of 8'x 8'x 8'. FEMA 320 published in 1998, provides construction details of 8' x 8' in-residence storm shelters made of reinforced concrete, timber, and concrete masonry units. To extend the usefulness of the storm shelter concept to large sized shelters, researchers felt a need for an analytical method that simulates actual field conditions during an extreme wind event. Finite element analysis was adopted as the appropriate tool to understand the behavior of storm shelters under extreme wind loads. In 2002, Shamsan used ALGOR as a finite element analysis (FEA) software to model the shelter designs specified in FEMA 320 [13]. Further, the work done by Ahmed in 2003 was helpful in validating ALGOR software as an acceptable tool for storm shelter modeling and analysis [14]. He compared the results of ALGOR for Concrete Masonry Unit (CMU) shelter with the results of the full-scale wind load test carried out on CMU shelter that was constructed as per FEMA 320. The deflections and strain values were the parameters used for comparison. This validation allowed him to use ALGOR for determining sizes larger than 8' x 8' for CMU shelters. Similarly in 2003, Qiao extended this work to find increased sizes for Reinforced Concrete (RC) shelters [15]. For timber-

steel shelters Davidson suggested larger sizes with some modifications in construction details for roof, in 2004 [16]. For validating the ALGOR modeling of timber-steel shelters Davidson compared his results with the results of full scale tests performed by Pierce in 2001 [12].

The design of on-grade floor slab is one of the important tasks towards ensuring proper load transfer from the shelter to the soil. The research work done for this thesis is the first step towards developing stipulations for on-grade concrete floor slabs that support the storm shelters.

CHAPTER III

ANALYSIS OF FLOOR SLABS FOR STORM SHELTERS

3.1 Introduction

The on-grade concrete floor slab that supports a storm shelter is subject to following forces (Figure 3.1):

1. Overturning moment (M).
2. Weight of shelter.
3. Self weight of slab.
4. Shear force (V).

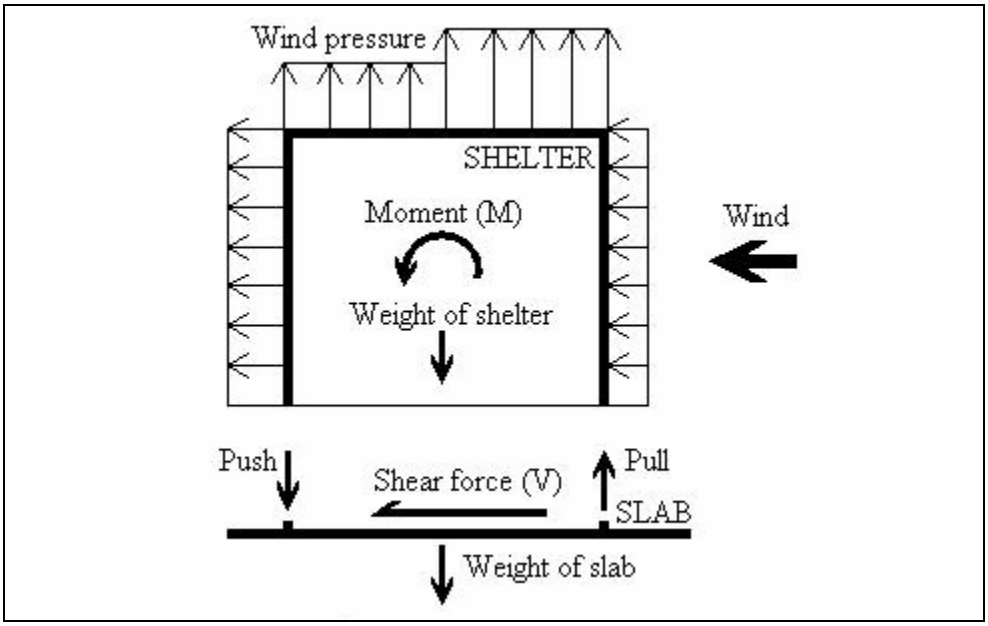

Figure 3.1: Forces on floor slab of a tornado shelter.

Overturning moment is created by the resultant of wind pressures acting on the windward wall, leeward wall and roof of the shelter. The wind pressures on the sidewalls,

being opposite and equal in magnitude neutralize each other and thus do not contribute to the overturning moment. The moment is transferred to the slab through the shelter-slab connections in the form of “pull” (upward force) on the windward side and “push” (downward acting force) on the leeward side. Shear force acting on the slab is the resultant force in the direction of wind that acts on the slab through the connections of walls to the slab. Weight of the shelter and self-weight of slab are the main restoring forces that stabilize the shelter.

The suction force from the soil beneath the slab is also helpful in resisting the overturning moment. Typically, clayey soils provide more suction force as compared to the sandy soils. The properties of soil vary from place to place and thus the magnitude of this suction force depends on the type of soil at the construction site. Soil suction has been neglected in the analysis of on-grade floor slabs for storm shelters, since it is difficult to generalize this parameter.

3.1.1 Modes of slab failure

The resultant forces acting on a storm shelter during an extreme wind event are capable of uprooting the shelter from the slab. If the shelter is intact against the wind forces and is connected efficiently to the slab, it can cause the slab to move with it in the upward direction. This is typical of lightweight shelters that cannot provide sufficient dead weight to prevent the overturning of shelter. In such a case, the slab bends about the leeward edge of the shelter. Further, the concentrated loads at connection points induce high tensile stresses in the concrete. Under the action of these forces, following modes of failure of concrete slabs can be anticipated:

1. Flexural cracking.
2. Concrete pullout failure.

Concrete is a brittle material and thus weak in tension. Reinforcement in the form of steel induces ductility in concrete. A properly designed reinforced concrete member is efficient in taking the flexural loads. During excessive load conditions, the steel reinforcement starts yielding and transfers the tensile stresses on to the concrete in tension zone. These tensile stresses cause the concrete to crack.

Flexural cracks are developed in the tension zone of concrete slab, when the modulus of rupture of concrete is exceeded under the action of external loads. Modulus of rupture is the flexural tensile strength of concrete. ACI-318 (equation: 9-9) provides the following expression for computing the modulus of rupture (f_r) of normal weight concrete having compressive strength of (f'_c):

$$f_r = 7.5\sqrt{f_c'} \quad \text{.....(3.1)}$$

Steel reinforcement is typically placed in the tension zone of concrete slabs in orthogonal directions to form a square mesh. The size and spacing of these reinforcing bars and the depth at which they are provided determine the flexural strength of the slab. When the flexural stresses are very large as compared to the shear stresses, the cracks are formed in the plane perpendicular to the plane of slab. In cases where shear forces are predominant, the cracks are formed in the plane inclined to the plane of slab [18]. For storm shelters, the floor slabs are subjected to high bending stresses as compared to shear stresses in the plane perpendicular to the plane of slab.

The formation of flexural cracks in a concrete member results in its reduction of moment carrying capacity. Under normal uncracked condition, the complete cross section of the concrete member contributes to the flexural stiffness. After cracking, the cross sectional area contributing to the flexural stiffness is reduced. For an elastic flexural member the relationship between the moment (M), curvature (ϕ) and flexural stiffness (EI) is given by:

$$EI = \frac{M}{\phi} \quad \text{.....(3.2)}$$

The moment-curvature diagram, as shown in Figure 3.2, explains the change in flexural stiffness of a reinforced concrete member under loading. The flexural stiffness before cracking is given by the slope of line OA. After cracking at point A, the tensile force taken by concrete reduces with increase in the load. Finally, at point B, the tensile force taken by concrete becomes negligible as compared to that taken by steel and the steel starts yielding. At point B complete cracked section is developed and the flexural

stiffness of this section is given by slope of line OB. The moment carrying capacity of the member between points A and C is the reserve strength of concrete after cracking. The slope of line OA is steeper than slope of line OB, indicating that the flexural stiffness of the member is reduced because of cracking.

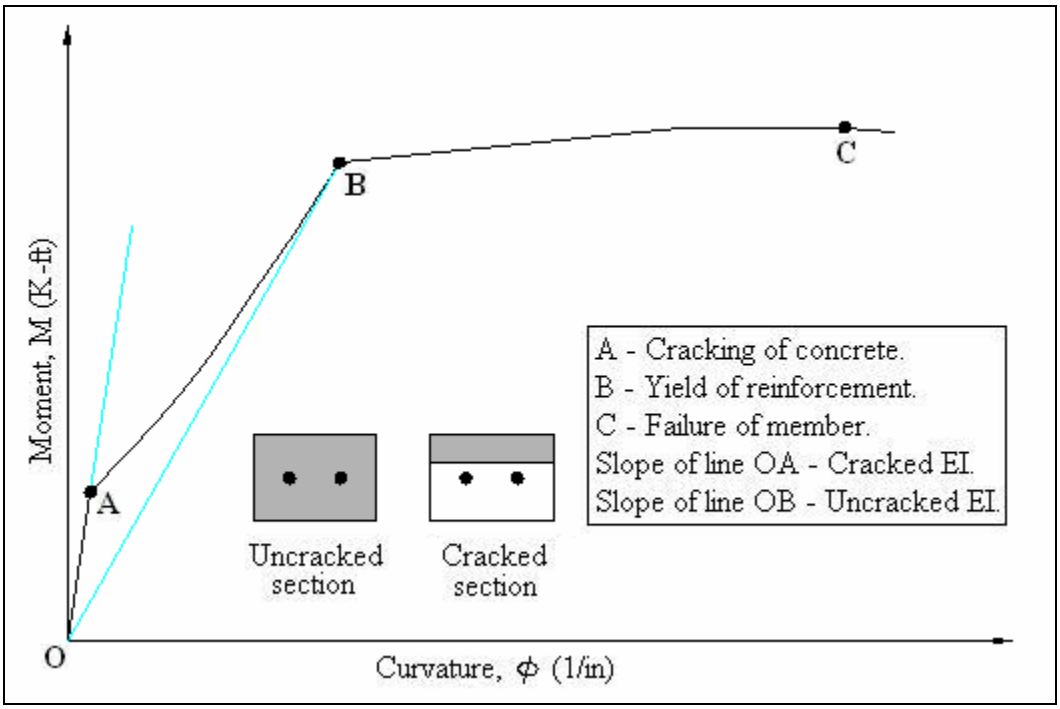

Figure 3.2: Moment-curvature diagram [17].

The effective moment of inertia (I_{eff}) of the concrete section after cracking is given by ACI-318 (section: 9.5.2.3):

$$I_{eff} = \left(\frac{M_{cr}}{M_a}\right)^3 I_g + \left[1 - \left(\frac{M_{cr}}{M_a}\right)^3\right] I_{cr} \quad \text{.....(3.3)}$$

where,

M_{cr} = cracking moment = $f_r\, I_g$ / y_t

I_g = moment of inertia of gross concrete section about centroidal axis, neglecting reinforcement.

I_{cr} = moment of inertia of cracked section transformed to concrete.

f_r = modulus of rupture of concrete, psi (given by equation 3.1)

y_t = distance from centroidal axis of gross section, neglecting reinforcement, to extreme fiber in tension.

M_{cr} = cracking moment.

M_a = maximum moment in the member at the loading stage for which the moment of inertia is being computed or at any previous loading stage [17].

The calculations for the moment carrying capacity of uncracked and cracked sections of the concrete slab for the storm shelters are shown in appendix E.

The most common type of failure at the connections due to a pulling force is the cone failure. The failure of concrete at the connections subjected to tension depends upon the magnitude of tensile force, strength of concrete, spacing between the anchor bolts, edge distance of the anchor bolt, and the embedment depth of the anchor bolt. Figure 3.3 shows the typical pullout failure of concrete that generally occurs if the anchor bolt of high strength is provided at shallow embedment depth. The cone generally starts from the bottom sides of anchor bolt and moves to the surface at an inclination of 30 to 45 degrees to the horizontal [22].

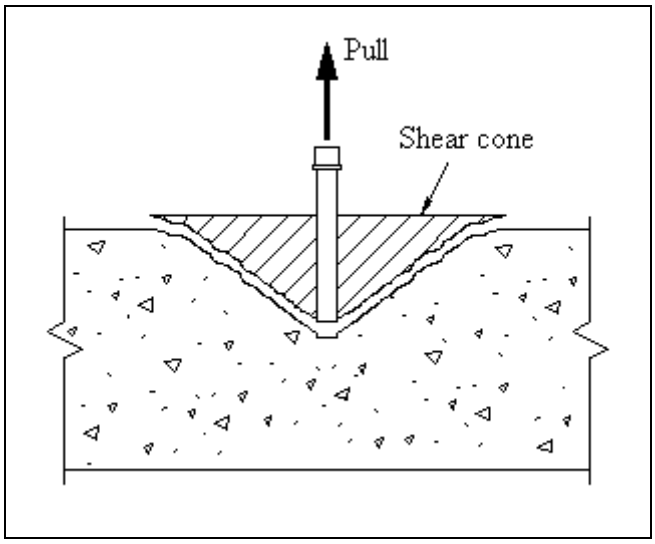

Figure 3.3: Concrete cone failure.

It is important to ensure that the slab-shelter connections of the storm shelters are functional during an extreme wind event. Efficient connections can ensure proper transfer of the shelter loads to floor slab.

3.1.2 Finite element analysis

A concrete slab can be analyzed for the internal stresses (flexural and shear) and deflections, by using the conditions of static equilibrium and geometric compatibility. Before cracking, the slab exhibits elastic behavior and thus can be analyzed using uncracked section properties. On cracking, the member enters an inelastic range. It becomes necessary to isolate the cracked sections from the uncracked ones, in order to use their corresponding section properties for slab analysis. The most common method is to divide the slab into a number of elements and then apply loads in increments. For each load increment, the slab elements are searched in order to see whether any cracking has taken place. The stresses and deflections are recomputed using the corresponding section properties for uncracked and cracked elements. Finite element analysis is a very effective method for such cases. A number of Finite Element Analysis (FEA) packages are available that can be used to solve complex engineering problem. Apart from providing excellent tools for modeling and analyzing structural members, modern FEA package also helps in interpreting results with accurate graphical representations.

ALGOR, the finite element analysis package that was used to solve the concrete floor slab for storm shelters, has a very good Graphical User Interface (GUI). It also provides the user with a wide range of tools that can help to model the structural member quickly and accurately.

3.2 Analysis procedure

The concrete floor slab for the storm shelters was analyzed for flexural stresses using the finite element analysis. Slab capacity was checked at the anchor bolt connections using the provisions given in ACI-318.

The shelter and floor slab were subjected to separate FEA analyses. The reason behind it was the incompatibility in modeling in ALGOR, the anchor bolt connections of the shelter to the slab. The pin supports used to model the anchor blots were required to rest on the slab, while the software was modeling these supports as global reactions (slab was being supported by these pin reactions in addition to the soil support). Thus instead of resting on the slab and transferring the forces onto it, these pin supports were functioning as reactions that absorbed all the forces coming from the shelter. Since the forces were to be transferred on the slab in the form of point loads, it was found accurate to model the shelter separately. Thus, the reactions of the shelter were used to get the point loads to be applied to the slab.

Construction details as furnished in FEMA 320 were followed for modeling Concrete Masonry Units (CMU) shelters and Reinforced Concrete (RC) shelters. The timber-steel shelters were modeled with 1 in. walls and 1 in. roof with all structural properties corresponding to that for the actual timber sections. The properties were taken from Davidson's research work [16]. The sizes of shelter considered for the slab analysis were (8'x 4'x 8') and (8'x 8'x 8'). Plate elements were used to simulate the walls and roof of the shelter. A mesh size of 4" x 4" was adopted to divide the shelter walls and roof in to equal number of quadrilateral elements. This size was used to accommodate the

pin supports at every 16 in. interval (average spacing of anchor bolts considered for the slab analysis). Figure 3.4 shows the configuration of support reactions for the two shelters. The loads applied to the shelter were computed in accordance with FEMA 361 for the case of an F5 tornado (i.e., considering 250 mph wind speed). The shelter was analyzed for support reactions for all the wind directions (i.e., East-West; West-East; North-South; South-North).

3.2.1 Flexural analysis

For flexural analysis, the slab was modeled in ALGOR software using plate elements with properties of 3000 psi normal weight cast in place concrete. For computing the moment carrying capacity of the member, the concrete was considered to be reinforced at mid depth with grade 60 steel bars, placed in both the directions at an equal spacing of 12 in. Mesh size for the finite elements was adopted as 4” x 4”, in order to match the connection points of the shelter. The loads (reactions) as obtained from the shelter were applied as nodal forces in accordance with Figure 3.4. Surface elastic boundary elements were used to model the soil support for the slab. The soil having minimum soil bearing capacity of 2000 psi was provided as translation type elastic compression springs [5], [23]. Further, to provide structural stability in the X-Y plane, the slab was fixed on atleast one edge. The fixity was also provided to simulate continuity. It shall be noted that all construction joints or sawn joints should be modeled as slab edge.

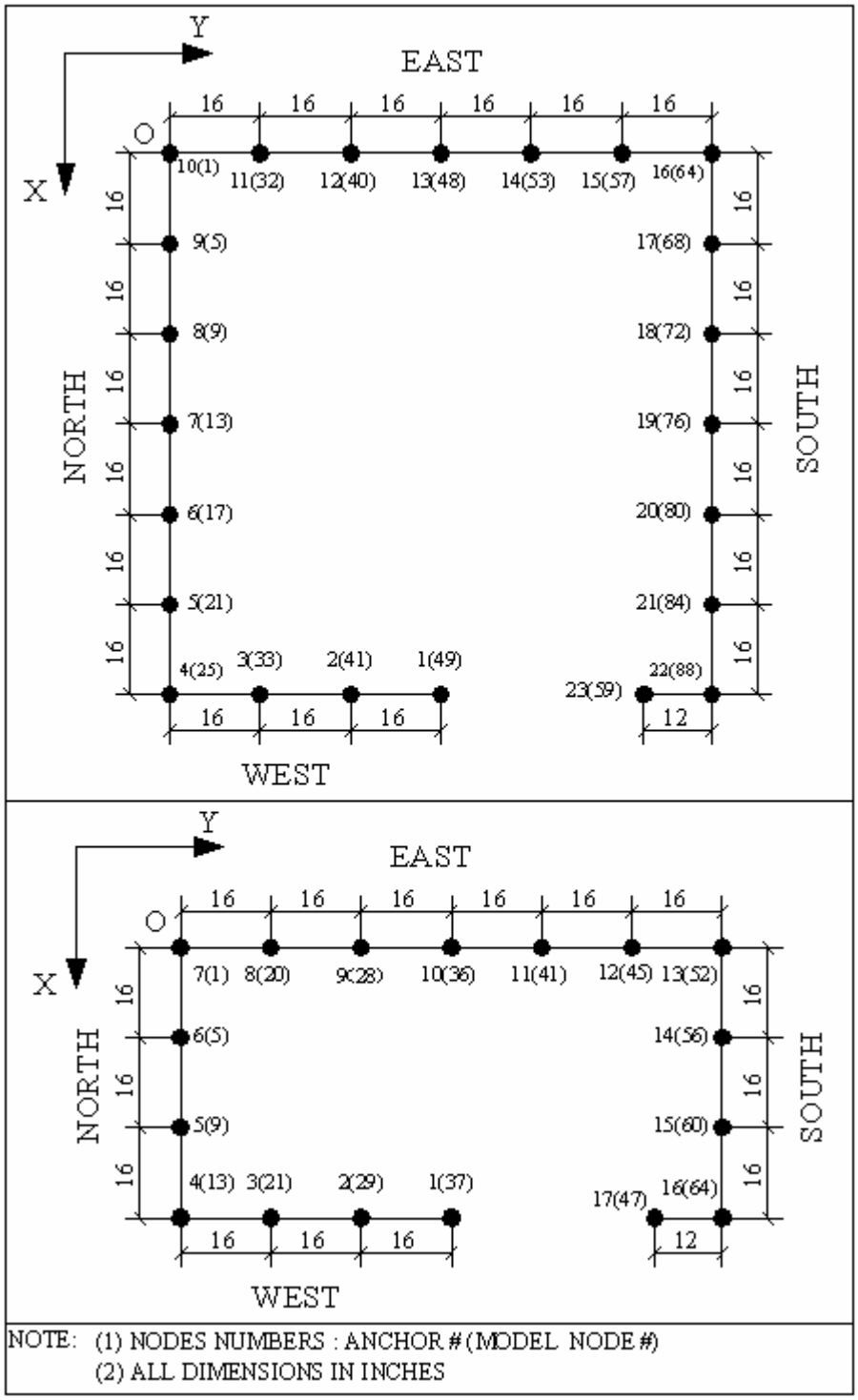

Figure 3.4: Configuration of supports for the storm shelters.

Static stress linear material model analysis was used to analyze the concrete floor slab. The different slab-shelter configurations used for flexure analysis are discussed in chapter 3.2.3. The stress contours obtained after the slab analysis for each case were used to find the locations where the stress in slab exceeds the maximum flexural stress of concrete.

3.2.2 Concrete strength in pullout

Concrete breakout strength at the anchor bolt connections was checked in tension, as per the provisions given in ACI-318. The nominal concrete breakout strength of an anchor in tension is given by ACI-318 (equation: D-4):

$$N_{cb} = \left(\frac{A_N}{A_{No}}\right)\psi_2\psi_3 N_b \quad \text{.....(3.4)}$$

where,

A_N = projected concrete failure area of an anchor limited by edge distance, for calculation of strength in tension.

A_{No} = projected concrete failure area of an anchor not limited by edge distance, for calculation of strength in tension (for an isolated anchor $A_N = A_{No}$)

ψ_2 = modification factor for edge effects ($\psi_2 = 1$ if smallest edge distance, $c_{min} \geq 1.5\ h_{ef}$ and $\psi_2 = 0.7 + 0.3\frac{c_{\min}}{1.5h_{ef}}$ if $c_{min} < 1.5\ h_{ef}$).

ψ_3 = modification factor for cracking of concrete ($\psi_3 = 1.25$ for uncracked concrete and $\psi_3 = 1.0$ for cracked concrete).

N_b = Basic concrete breakout strength of a single anchor (in lbf), given by ACI-318 (equation: D-7): $N_b = 24\sqrt{f_c^{'}}h_{ef}^{1.5}$ for cast-in anchors.

h_{ef} = effective anchor embedment depth, in.

The modification factor for cracking of concrete used for the calculations indicates a reduction of 25% in concrete strength after cracking. The calculations for concrete breakout strength are shown in appendix F.

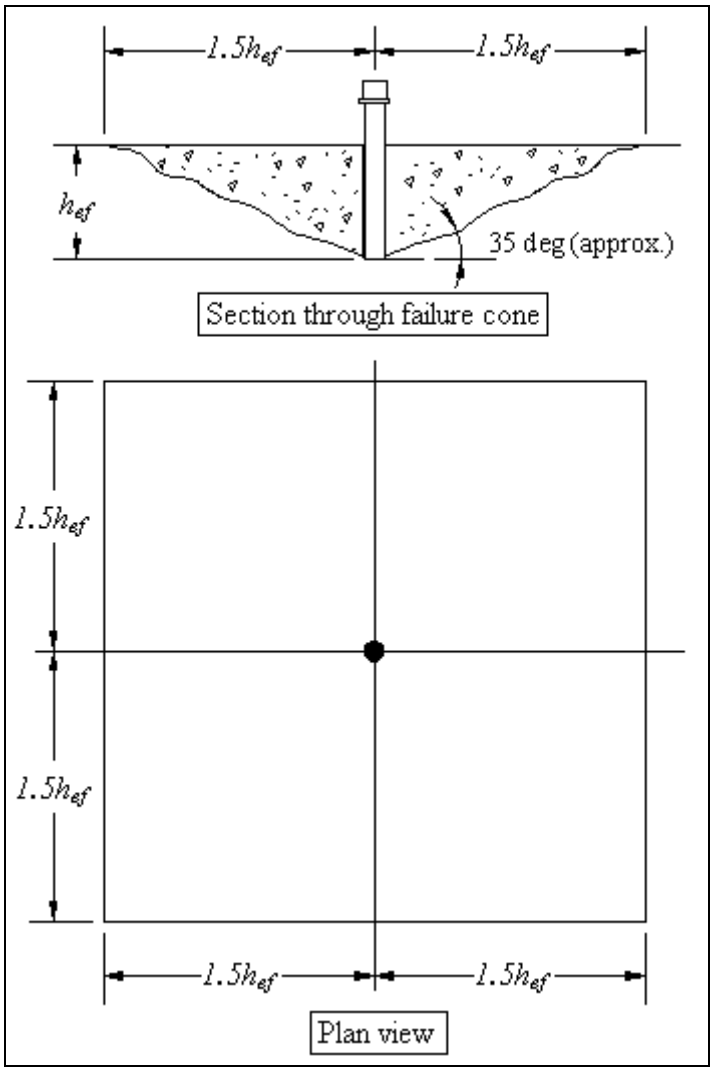

Figure 3.5: Projected concrete failure area, under pullout force.

3.2.3 Slab-shelter configuration

In the case of new houses, the storm shelter can be provided at the most suitable location, by proper planning. It becomes difficult to build the shelter in an existing house, in which case one might not get the most favorable location. Thus, the slab-shelter configuration is a very important aspect of the analysis of floor slabs. The configurations C-1 to C-3, considered for the analysis are explained below with the help of Figure 3.6:

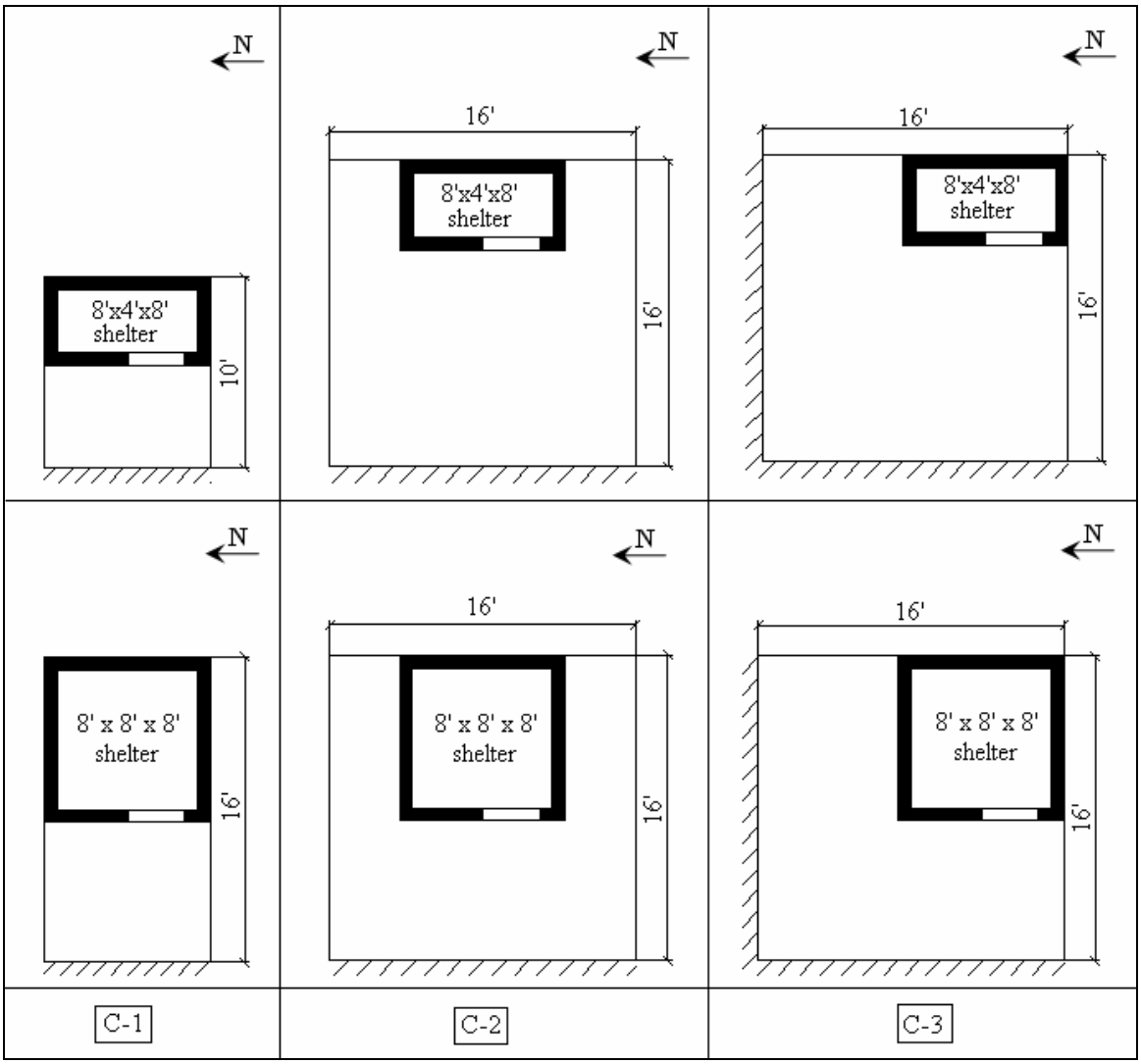

Figure 3.6: Slab-shelter configurations.

1. Configuration-1 (C-1)-Edge of an 8'- wide slab strip: This configuration represents a shelter mounted at the edge of a strip of slab that has width equal to that of the shelter (8 feet). This case is common when a shelter is to be built adjacent to the existing building or at the end of a driveway. This configuration is the most critical case for the slab analysis. The contribution of slab self weight is minimum and restricted to the width of shelter. The soil suction that prevents the slab uplift during the wind event is also restricted by the width of slab available. Furthermore, the slab cannot get the anchorage support of the reinforcement, due to absence of slab offset (distance to the edge of slab from the shelter walls) on the sides. These factors result in very high loads acting on the slab which in turn causes more uplift of the slab at windward edge. Continuity of slab was assumed at the edge attached to the slab of existing building.
2. Configuration-2 (C-2)-Center-edge of a 16' x 16' slab: This configuration represents the shelter mounted on a center edge of the corner room of an existing house, a room that projects out of the building plan, or an isolated floor slab of a garage. The configuration provides better contribution of slab self-weight and soil suction as compared to C-1. Further, the offsets are sufficient to allow the reinforcement to add to the anchorage of the shelter to the slab. Continuity was assumed at the edge of the slab monolithic with the slab of the house.
3. Configuration-3 (C-3)-Corner edge of a 16' x 16' slab: This configuration represents the shelter mounted at the corner edge of an existing corner room or the isolated floor

slab of a garage. The configuration is a very common case that might be encountered. Continuity was assumed at the edges that are monolithic with the slab of the house.

4. Configuration-4 (C-4)-Shelter built on an isolated slab: This configuration was considered to cover the cases where the shelter is not attached to the house. The slab thickness for each shelter case was determined by hand calculations, assuming the dead weight to counteract the overturning moment caused by wind forces (refer appendix C). This configuration was checked with different offsets of slab all around the shelter.

The offset length for Configuration C-1 was selected in such a way that the stresses in slab are not affected by the fixity at the far end. If the offset provided to the strip is less than the values as shown in Figure 3.6, the connection (fixed edge) of the slab should be designed for the fixed end stresses. All configurations were analyzed for the most critical wind direction. Three cases of soil support were considered for 3.5" thick slabs, in order to understand the behavior of slab resting on soils of different stiffness. The first case involved the soil properties as per FEMA 320. In the second case, a soil having 10 times the stiffness of soil used in first case was assumed. The third case involved soft soil having bearing capacity of 1500 psf. The CMU shelter was the heaviest considered for the case of only dead load acting on the slab supported on soft soils. The soil capacity was checked for carrying the weight of shelter. The measuring parameters were the displacements caused in slab by settlement of soil and the bending stresses in the slab due to such settlements.

The shelter was assumed to be a stiff box that is tied to the flexible foundation (slab). Since the rigidity of the shelter was assumed to be quite high as compared to that of the slab, the slab was modeled for rigid body rotation and deflection. The elements corresponding to the footprints of shelter walls on slab were increased in stiffness by a factor of 10 (i.e., the thickness of these elements was increased by a factor of 10). This allowed the slab to rotate and deflect as a rigid body. Since the actual behavior of slab connected to the shelter at 16" o.c. was unknown, the slab was also modeled with uniform stiffness.

The slab was checked for a thickness of 3.5 in. with # 3 reinforcement bars at 12 in o.c. in each direction. This case represents the shelter mounted on an existing house slab. For newly constructed floor slabs the minimum steel specified in FEMA 320 is # 4 steel bars at 12 in o.c. in each direction.

3.2.4 Assumptions

The following assumptions were made while analyzing the floor slab for storm shelters:

1. The dimensions used for the shelter modeling (i.e., 8' x 4' x 8', and 8' x 8' x 8') were assumed to be the centerline dimensions. These dimensions are shown as outside dimensions for timber-steel shelters and as inside dimensions for CMU and RC shelters in FEMA 320.
2. The door of size 3'x 7' was considered as an opening in the shelter modeling. The opening introduced the structural asymmetry, as would be experienced in reality. The

wind pressure was applied in the form of concentrated loads, at the six node points (3 on each side) that represented the doorframe connections.

3. Shelter was assumed to be rigid and intact under the extreme wind event (250 mph wind speeds). Being structurally sound under the wind forces, the shelter can transfer all the loads to the slab efficiently. In addition, this allows the shelter weight to counteract the uplift of slab.
4. The anchor bolt connections were assumed to be intact and structurally sound to transfer the loads from the shelter to the slab efficiently.
5. The slab was designed for F5 tornadic wind conditions (250 mph wind speeds). Thus, it was assumed that the slab would perform safely under hurricanes (200 mph wind speeds).
6. The slab was modeled with concrete properties and the reinforcement was not modeled. Thus, the behavior of slab after cracking (in plastic range) was not studied in the analysis using ALGOR. The maximum stresses obtained from ALGOR analysis were compared with the stresses computed based on mechanics of reinforced concrete material, after cracking. Slab turn-downs at the edges were not considered. Turn-downs add significantly to the weight and edge strength of slabs.
7. The reinforcement was assumed to be at the center of the slab depth. This is conservative, since in practice most slab reinforcement is placed closer to the bottom of the slab where it would be more effective in resisting uplift moments than the configuration assumed.

8. Soil suction was not considered. This is a conservative assumption, since in reality soil suction will resist the uplift of slab caused by wind loads. Thus the soil was modeled as a bed of compression springs.
9. The anchorage offered by the dowel action of slab reinforcement was neglected. This assumption holds good for the cases where the slab shelter connections are connected to the slab reinforcement. It is valid for configurations C-2 and C-3 that have sufficient offsets to accommodate sufficient anchorage length of slab reinforcement.

All the assumptions were aimed at achieving the most conservative design for slabs.

3.3 Type of shelters

The on-grade concrete floor slab was analyzed and designed for following type of storm shelters:

1. Concrete Masonry Unit shelters (CMU shelters).
2. Reinforced Concrete shelters (RC shelters).
3. Timber-steel shelters.

These shelters were modeled in ALGOR using stipulations and construction details as given by FEMA 320. For timber shelters the details for roof framing was adopted as suggested by Davidson [16]. The most important construction detail for the slab analysis was the spacing of wall-slab connections, because these were the points of force transfer from shelter to the slab.

3.3.1 Concrete masonry unit shelter

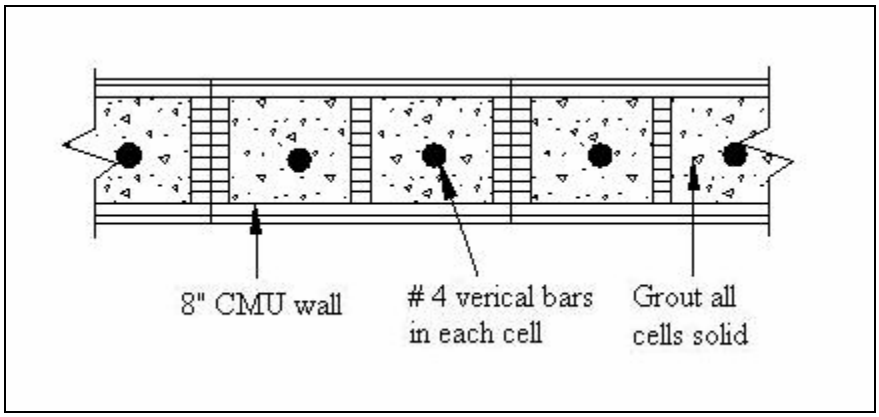

Figure 3.7: Sectional top view of CMU wall [5].

The construction details of CMU shelter considered for the floor slab analysis were as follows:

1. Walls: 8 in. concrete masonry unit wall, reinforced with # 4 vertical bars in every cell and with all cells filled with pea gravel concrete grout [14].
2. Roof: 4 in. concrete roof reinforced with #4 bars @ 16 in. on center, in orthogonal directions.
3. Wall-Roof connection: Wall connected to roof by # 4 bars @ 16 in. on center, with required splice lengths (given by FEMA 320).
4. Wall-Floor slab connection: Wall connected to floor slab by # 4 bars @ 16 in. on center, with required splice lengths (given by FEMA 320).

3.3.2 Reinforced concrete shelter

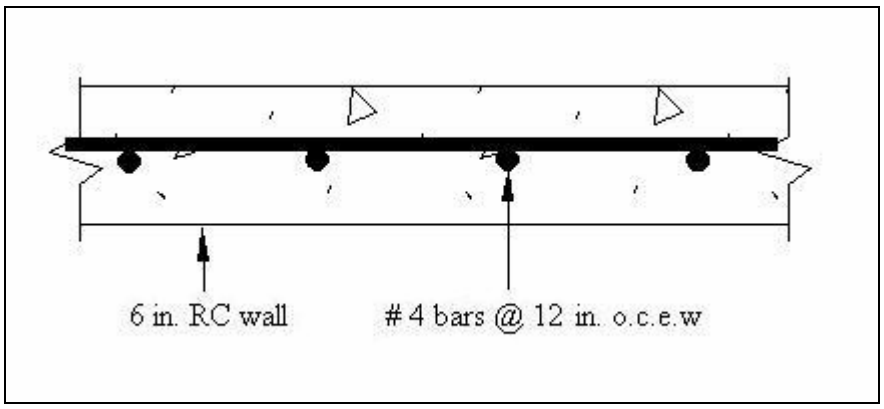

Figure 3.8: Sectional top view of RC wall [5].

The construction details of RC shelter considered for the floor slab analysis were as follows:

1. Walls: 6 in. concrete wall reinforced with # 4 vertical bars @ 12 in. on center, in orthogonal directions.

2. Roof: 4 in. concrete roof reinforced with #4 bars @ 12 in. on center, in orthogonal directions.
3. Wall-Roof connection: Wall connected to roof by # 4 bars @ 12 in. on center with required splice lengths (given by FEMA 320).
4. Wall-Floor slab connection: Wall connected to floor slab by # 4 bars @ 24 in. on center with required splice lengths (given by FEMA 320).

3.3.3 Timber-steel shelter

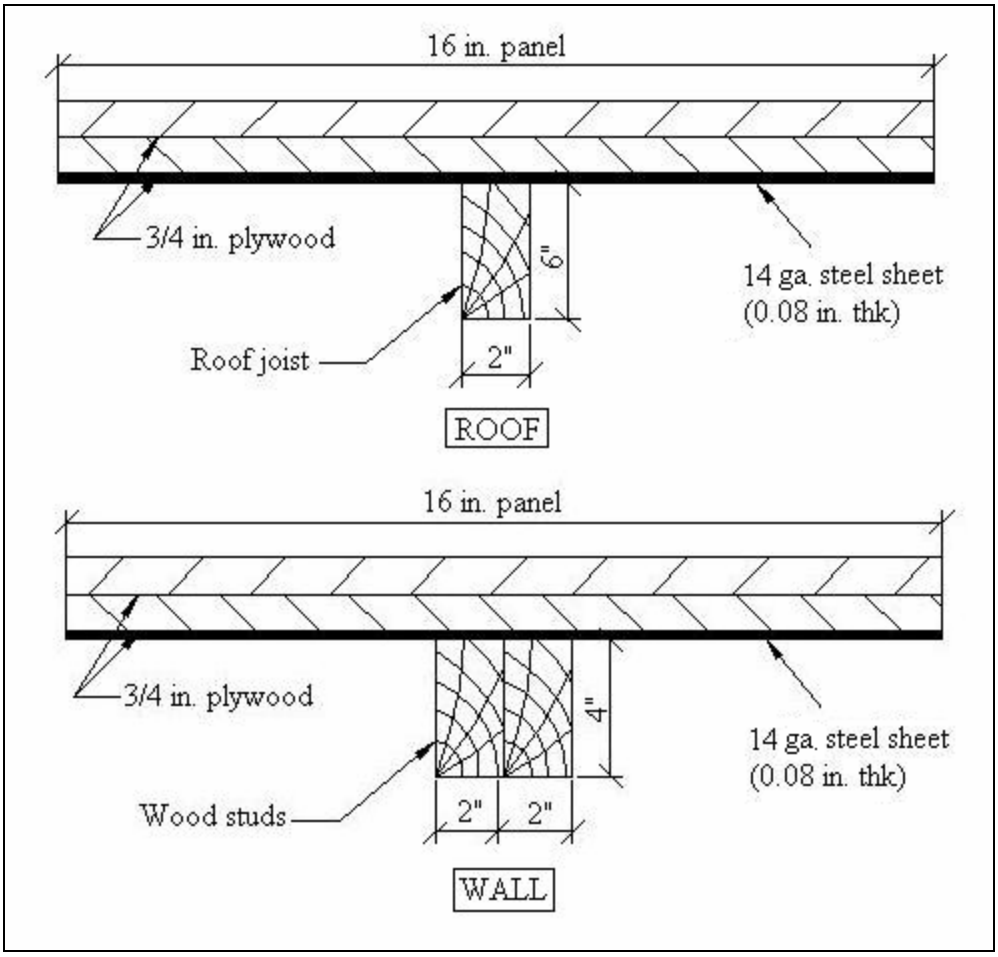

Figure 3.9: Sectional view of roof and wall for timber-steel shelter [16].

The construction details of timber-steel shelter (also referred as timber shelter in this thesis) considered for the floor slab analysis were as follows:

1. Walls: Wall made of two ¾ in. plywood sheets and a 14 ga. steel sheet (refer Figure 3.9) supported by two 2" x 4" wooden studs.
2. Roof: Roof covering made of two ¾ in. plywood sheets and a 14 ga. steel sheet (refer Figure 3.9) supported by one 2" x 6" wooden roof joist.
3. Wall-Roof connection: Wall connected to the roof @ 16 in. on center with connections specified in FEMA 320.
4. Wall-Floor slab connection: Wall connected to floor slab @ 16 in. on center, with anchor bolts.

3.4 Material properties

Material properties for the on-grade floor slab for storm shelters were evaluated in accordance with FEMA 320 and ACI 318-02. The slab was modeled as cast-in-place reinforced concrete. Normal weight concrete having 28-day compressive strength (f'_c) of 3000psi was considered. Reinforcement in the form of mild steel bars having yield strength of 60ksi was assumed at 12in. center-to-center spacing in orthogonal directions. These bars were assumed to be placed at the mid-depth of the slab.

Mass density (ρ_c), modulus of elasticity (E_c), poisson's ratio (υ_c), and shear modulus of elasticity (G_c) are the material properties to be specified in ALGOR in order to accurately model any material. For normal weight concrete, the mass density of

concrete was assumed 2.25e-04 lbm/in^3 (i.e., weight density equal to 150 lbf/ft^3). The modulus of rupture for normal weight concrete is given by ACI-318 (section: 8.5.1) as:

$$E_c = 57{,}000\sqrt{f_c^{'}} \quad (3.5)$$

Assuming concrete to be an isotropic material its Poisson's ratio was taken as 0.15. The shear modulus of elasticity was computed based on following expression:

$$G_c = \frac{E_c}{2(1+\upsilon_c)} \quad (3.6)$$

The same expression was used to compute the shear modulus of elasticity for the walls of CMU shelter, with the same value of Poisson's ratio (i.e., $\upsilon_{cmu} = 0.15$). The concrete roof for the CMU and RC shelters was also modeled with the above-mentioned material properties.

For the CMU shelter walls the mass density was adopted as 1.87e-04 lbm/in^3 (i.e., weight density equal to 125 lbf/ft^3) [14]. Its modulus of elasticity was computed based on the following equation given by building code requirements for masonry structures (section 1.8.2.2.1) [21]:

$$E_{cmu} = 900\, f_m^{'} \quad (3.7)$$

Where,

f'_m = ultimate compressive strength of CMU at 28 days = 1500 psi [5].

The roof and walls of timber-steel shelter were modeled with equivalent 1 in. thick sections having equivalent mass density corresponding to that of the actual structural configuration as discussed in chapter 3.3.3. The calculations for mass density for timber walls and roof are shown in appendix A. Timber being an orthotropic material

was modeled with modulus of elasticity in the two orthogonal axes. The values for modulus of elasticity, Poisson's ratio and shear modulus of elasticity were assumed based on Davidson's work on timber-steel shelter [16].

Table 3.1 provides the values of all material properties that were used to model the slab and shelter. The calculations are shown in appendix A.

Table 3.1: Material properties used for the floor slab and shelters.

<table>
<tr><td rowspan="2">Material properties</td><td rowspan="2">CMU</td><td rowspan="2">Concrete</td><td colspan="4">Wood frame</td></tr>
<tr><td colspan="2">1in. thk. Walls</td><td colspan="2">1in. thk. Roof</td></tr>
<tr><td>Weight density (lbf/ft^3)</td><td>125</td><td>150</td><td colspan="2">119</td><td colspan="2">112</td></tr>
<tr><td>Mass density (lb/in^3)</td><td>1.87E-04</td><td>2.25E-04</td><td colspan="2">1.79E-04</td><td colspan="2">1.68E-04</td></tr>
<tr><td rowspan="2">Modulus of elasticity (lb/in^2)</td><td rowspan="2">1.35E+06</td><td rowspan="2">3.12E+06</td><td>Local Axis 1</td><td>Local Axis 2</td><td>Local Axis 1</td><td>Local Axis 2</td></tr>
<tr><td>7.01E+06</td><td>9.28E+05</td><td>1.98E+07</td><td>9.28E+05</td></tr>
<tr><td rowspan="2">Poisson's ratio</td><td rowspan="2">0.15</td><td rowspan="2">0.15</td><td colspan="2">Local Plane 12 (Major)</td><td colspan="2">Local Plane 12 (Major)</td></tr>
<tr><td colspan="2">0.3</td><td colspan="2">0.3</td></tr>
<tr><td>Shear modulus of elasticity (lbf/in^2)</td><td>586957</td><td>1357399</td><td colspan="2">1.15E+06</td><td colspan="2">2.01E+06</td></tr>
</table>

3.5 Design loads on the floor slab

FEMA 361 (chapter: 5) provides guidelines for determining the design loads and load combinations for storm shelters. The design loads acting on the storm shelter are as follows:

1. Basic loads.
2. Extreme wind loads.

These loads were assumed to be transferred to the on-grade floor slab as per continuous load path mechanism. According to the mechanism, the loads follow a continuous flow path from the structural members of storm shelter to the slab and from slab to the soil beneath it. The loads from the shelter are transferred in the form of concentrated loads at the points of slab-shelter connection.

3.5.1 Basic loads

Dead loads and live loads constitute the basic loads that act on the slab. For slab analysis the self-weight of shelter and floor slab were considered as dead loads. Thus mass density for each material as mentioned in Table 3.1 was used to compute self-weight of the corresponding structural component. The live loads acting on the roof and floor slab were neglected in the slab analysis considering their very small contribution as compared to other design loads on the shelter.

3.5.2 Extreme wind loads

In compliance with FEMA 361, the extreme wind loads for the floor slab of storm shelters were computed using ASCE 7. The wind load provisions given in ASCE 7 are based on non-cyclonic, straight-line winds that can effectively simulate hurricanes. However, numerous investigations of buildings damaged by tornado were found to be consistent with the building damage possible due to wind loads computed using ASCE 7. This fact allows us to use the provisions given by ASCE 7, to compute wind loads on buildings for tornadoes [4].

As discussed above the floor slab for storm shelters is an important structural link that contributes to the continuous load path mechanism. In accordance with ASCE 7-02, the slab qualifies as a part of structural assembly that provides support and stability for the shelter and that receives wind loading from all surfaces of the shelter [10]. Thus, the design of these slabs was based on the procedure given for Main Wind Force Resisting System (MWFRS). Analytical procedure was used to accurately compute wind loads for tornado and hurricane shelters [4].

The calculation of the wind loads is based on following factors: gust effect factor (G), velocity pressure (q_z), the design wind pressure (p). Assuming the shelter to be a rigid building in site exposure C, the gust effect factor was taken as a maximum of 0.85 and the value obtained from the equation 6-4 of ASCE 7-02 [10].The velocity pressure (q_z) evaluated at height z is given by following equation(ASCE 7-02; section 6.5.10):

$$q_z = (0.00256)K_z K_{zt} K_d V^2 I \ \ (\text{lb/ft}^2) \qquad (3.8)$$

where,

K_z = velocity pressure exposure coefficient at height z above ground.

K_{zt} = topographic factor.

K_d = wind directionality factor.

V = design wind speed (mph).

I = Importance factor.

The design wind speed of 250 mph was adopted as per Figure 1.3, for shelters subjected to an F5 tornado in zone IV (the extreme case). This wind speed as given in the wind zone map is based on very great Mean Recurrence Interval (MRI) (i.e., low probability of being exceeded). Thus, the importance factor was taken as 1.0. Site exposure C was adopted to simulate open terrain, assuming the area to be flattened during a tornado or hurricane. Further, the wind directionality factor was taken as 1.0, in order to consider the full effect of wind from its most vulnerable direction. The topographical factor was also taken as a unity [4].

The design wind pressure on each surface of the shelter was computed as per the following equation [10]:

$$p = q_z\left(GC_p - \left(GC_{pi}\right)\right) \text{ (lb/ft}^2\text{)} \qquad (3.9)$$

where,

C_p = external pressure coefficients from ASCE 7-02; Figure 6-6.

(GC_{pi}) = internal pressure coefficient from ASCE 7-02; Figure 6-5.

The values of the pressure coefficients used for the slab analysis are shown in Table3.2

Table 3.2: Wind pressure coefficients [10].

External pressure coefficients			
(A) Wall pressure coefficients (C_p):			
Surface	L/B	C_p	
Windward wall	All values	0.8	
Leeward wall	0-1	-0.5	
	2	-0.3	
	≥4	-0.2	
Side wall	All values		
(B) Roof pressure coefficients (C_p):			
Wind direction	h/L	Horizontal distance from windward edge	C_p
Normal and parallel to the ridge (θ < 10 degrees)	≤ 0.5	0 to h/2	-0.9, -0.18
		h/2 to h	-0.9, -0.18
	≥ 1.0	0 to h/2	-1.3, -0.18
		> h/2	-0.7, -0.18
(C) Internal pressure coefficients (GC_{pi}) for partially enclosed buildings: ± 0.55			
Note: Intermediate values of C_p were found by linear interpolation; L = horizontal dimension of the shelter measured parallel to the wind direction; B = horizontal dimension of shelter measured normal to wind direction; h = mean roof height of the shelter.			

The calculation spreadsheet used for computing wind pressure on each shelter surface is shown in appendix B.

3.5.3 Load combinations

Load combinations using strength design were considered for the analysis of concrete floor slab. As per FEMA 361 (section 5.4.1), the load combination assumed to be most critical for the floor slab analysis was 0.9D + 1.2W (D = dead loads; W = wind load from the most critical direction). As discussed earlier, dead load is the major force that prevents the overturning of the shelter during an extreme wind event. The reduction of dead loads and increase in the wind loads make this load combination the most critical case of overturning.

3.6 Modeling of Soil

The soil was modeled as linearly elastic springs with its stiffness taken as equal to the modulus of subgrade reaction (refer Figure 3.10). Modulus of subgrade reaction is one of the elastic properties of the soil, used in the structural analysis of foundation members. It is a relationship between soil pressure (q) acting on a foundation member and its deflection (δ), due to applied force on the member. It is defined as:

$$k_s = \frac{q}{\delta} \quad \text{.....(3.10)}$$

The empirical equation that was used for computing modulus of subgrade reaction is as follows [20]:

$$k_s = 12(SF)q_a \text{ k/ft}^3 \quad \text{.....(3.11)}$$

where,

SF = Factor of safety; q_a = Allowable bearing capacity of soil in ksf.

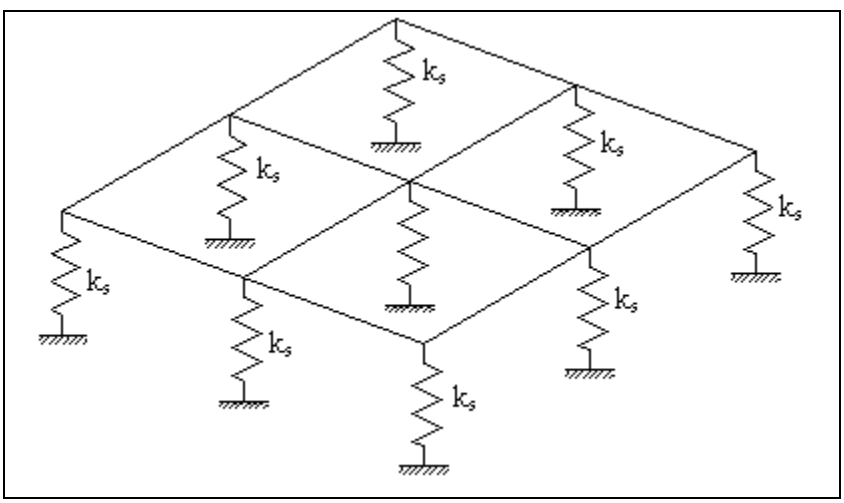

Figure 3.10: Soil represented as bed of springs for modeling slab support.

For the slab analysis a factor of safety of 2.0 was assumed. FEMA 320 suggests a minimum soil bearing capacity of soil as 2000 psf [5]. Thus, the allowable bearing capacity of soil was taken as 2 ksf. The value of modulus of subgrade reaction was found to be 48 k/ft^3 (7540 kN/m^3). This soil can be categorized as very soft soil (loose sands) [20]. Further, assuming the mesh element of slab as 4in x 4in, the stiffness of spring per mesh element was found to be 444 lbf/in. The spring acted in compression only and soil suction (spring in tension to counter the upward deflection of slab) was not modeled.

In many cases the floor slab may be supported by soft soils. Thus, soil having a bearing capacity of 1500 psf was considered to study the behavior of 3.5 in. slab resting on a softer soil. Also, in order to understand the behavior of 3.5 in slab resting on a stiff soil, the spring stiffness was increased by 10 times.

3.7 Criteria of failure

Flexural analysis of the floor slab involves the analysis with both cracked and uncracked sections of slab. The effectiveness of the slab subjected to bending decreases on being cracked. The reserve strength of slab after cracking was computed using the effective flexural stiffness of cracked section. The limiting value of flexural stress was obtained as the sum of modulus of rupture strength and the reserve strength in reinforced concrete between cracking and failure. For 3000 psi concrete the modulus of rupture strength was computed as 410 psi (refer appendix A). Using a strength reduction factor of 0.9 (tension controlled failure); the factored modulus of rupture was found out to be 369 psi. The limiting value of flexural stress was computed using the following equation:

$$\phi\sigma_{\lim} = \phi f_r + \phi\sigma_{res} \quad \text{.....(3.12)}$$

where,

ϕf_r = Factored modulus of rupture strength of concrete, psi.

$\phi\sigma_{res} = \left(\dfrac{\phi M_n - \phi M_{cr}}{I_{eff}}\right) y_{t\_cr}$ = reserve strength of reinforced concrete section, psi.

ϕM_n = Factored nominal moment carrying capacity of slab section, lbf-in.

ϕM_{cr} =Factored cracking moment carrying capacity of slab section, lbf-in.

I_{eff} = Effective moment of inertia of slab section after cracking, in^4.

y_{t_cr} = Distance of maximum tensile stress in a cracked section, in.

This expression is based on the behavior of reinforced concrete after cracking as explained in Figure 3.2. Table 3.3 provides the limiting flexural stress values for all the

slab cases considered in the analysis. It can be noticed that for each size the steel plays a very important role in providing the reserve strength to the concrete member. These values provided the criteria of failure for slabs subjected to flexural stresses.

Table 3.3: Failure criteria for bending.

Slab thickness (t, in)	Steel Reinforcements (#)	Reserve strength in RC slab after cracking $\phi\sigma_{res}$ (psi)	Limit stress in RC slab $\phi\sigma_{\lim}$ (psi)
3.5	3	33	402
3.5	4	862	1231
5.5	4	128	497
5.5	5	828	1197
Note: Refer Appendix E for sample calculation for 3.5 in slab.			

Stress tensor components in XX and YY direction (σ_{xx} and σ_{yy}) were considered in order to understand the flexural response of the concrete slab. These stresses were used to locate the elements that indicate the onset of cracking on the slab.

The slabs designed for bending were checked for concrete pullout strength to ensure adequate strength of concrete at the connections. The concrete breakout strength as discussed in chapter 3.2.2 provides the magnitude of force that should not be exceeded by any slab-shelter connection during the wind event. The loads at the connections as obtained from the shelter analysis are checked against this maximum value.

CHAPTER IV

RESULTS AND DISCUSSION

The procedure adopted to analyze the floor slab for storm shelters, was found to be reasonable in ascertaining the strength of slab material during an extreme wind event. The results of slab analysis for all the slab-shelter configurations are discussed in this chapter. These results are helpful in designing the reinforced concrete slab for thickness and reinforcing steel, for a particular configuration.

4.1 Flexural analysis

The slab was analyzed for the critical load combination corresponding to extreme wind loads. The results for each shelter type have been explained with appropriate graphical representations, in the following chapters. The bending strength of slab with configuration C-1 was also checked for dead load alone. This case involved the dead loads coming from the heaviest shelter (i.e. CMU shelter in this case).

The shelters have been categorized as heavy shelters (CMU and RC shelters) and light shelters (Timber-steel shelters) for the purpose of presenting the results. For all the cases the stress tensor in YY- direction was found to be critical. Thus this stress value was used to monitor the tensile stress in concrete slab. The comments for each case include the information about maximum tensile stress and location of cracking in the slab. As discussed in chapter 3.2.3, all the configurations were analyzed with uniform stiffness as well as box stiffness (the elements representing the footprint of shelter walls

increased in stiffness to simulate a rigid body rotation of slab). As a general observation, it was found that all configurations with box stiffness were more critical in terms of flexural stress as compared to the corresponding configurations having uniform stiffness. Based on the assumption that the slab is stiffer than the soil beneath, uniform stiffness was considered for slabs subjected to dead loads from the heavy shelters.

4.1.1 Heavy shelters

The weight of CMU and RC shelters was found to be sufficient to negate the uplift forces caused by the wind (refer Table 4.1). Further the weight of CMU shelter being more than the RC shelters, the flexural analysis of slab for dead loads was carried out based on load from the CMU shelters. The load values as shown in Table 4.1 are based on the hand calculations as covered in appendix C.

Table 4.1: Loads acting on slab supporting heavy shelters.

Heavy shelters		Weight (lbf)	Uplift due to wind (lbf)	Net force on slab from shelter (lbf)
CMU	8' x 4' x 8'	-14265	9019	-5246
	8' x 8' x 8'	-20505	15201	-5304
RC	8' x 4' x 8'	-12983	9019	-3964
	8' x 8' x 8'	-18743	15201	-3542

Note:
(a) The (-ve) values indicate loads acting on slab in downward direction.
(b) The self weight of slab has not been considered.

The floor slab with 3.5 in. thickness was checked for bending strength, with only the dead loads of the CMU shelter (8’ x 4’x 8’ and 8’ x 8’x 8’) acting on it. The ALGOR

results for these cases are shown in Figure 4.1 and Figure 4.2. It was found that the 3.5” slab did not show any cracking (i.e. all stress values in slab were less than 369 psi) for both; 8’x 4’x 8’ and 8’x 8’x 8’ CMU shelters. The maximum stresses were observed in the slab at the center location of shelter.

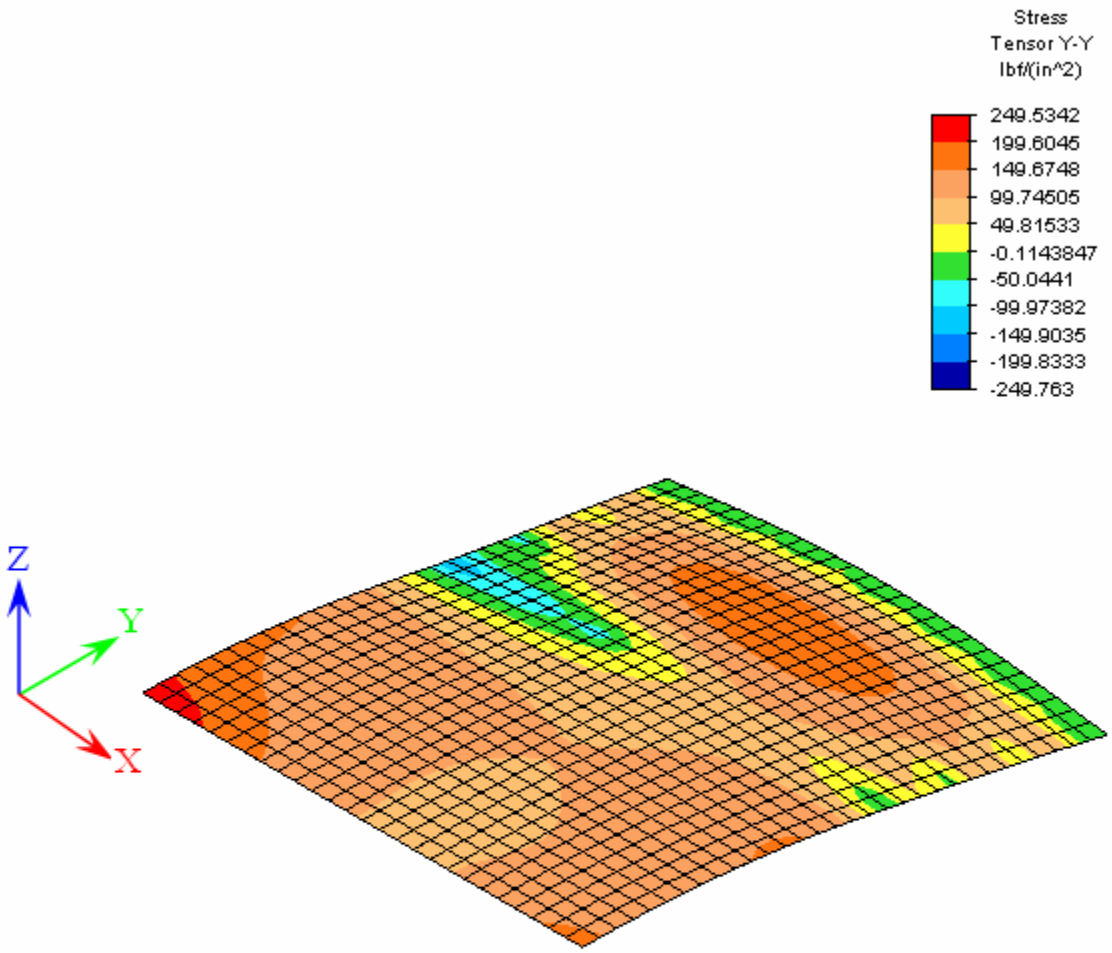

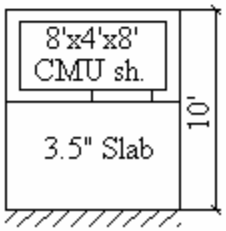

C-1 - Dead load only (Uniform stiffness) – 3.5" Slab		
Maximum Deflection (in)		σ_{max} (psi)
δ_{up}	δ_{down}	
-	0.16	250

Figure 4.1: 3.5in. slab supporting 8'x 4'x 8' CMU shelter (dead load only).

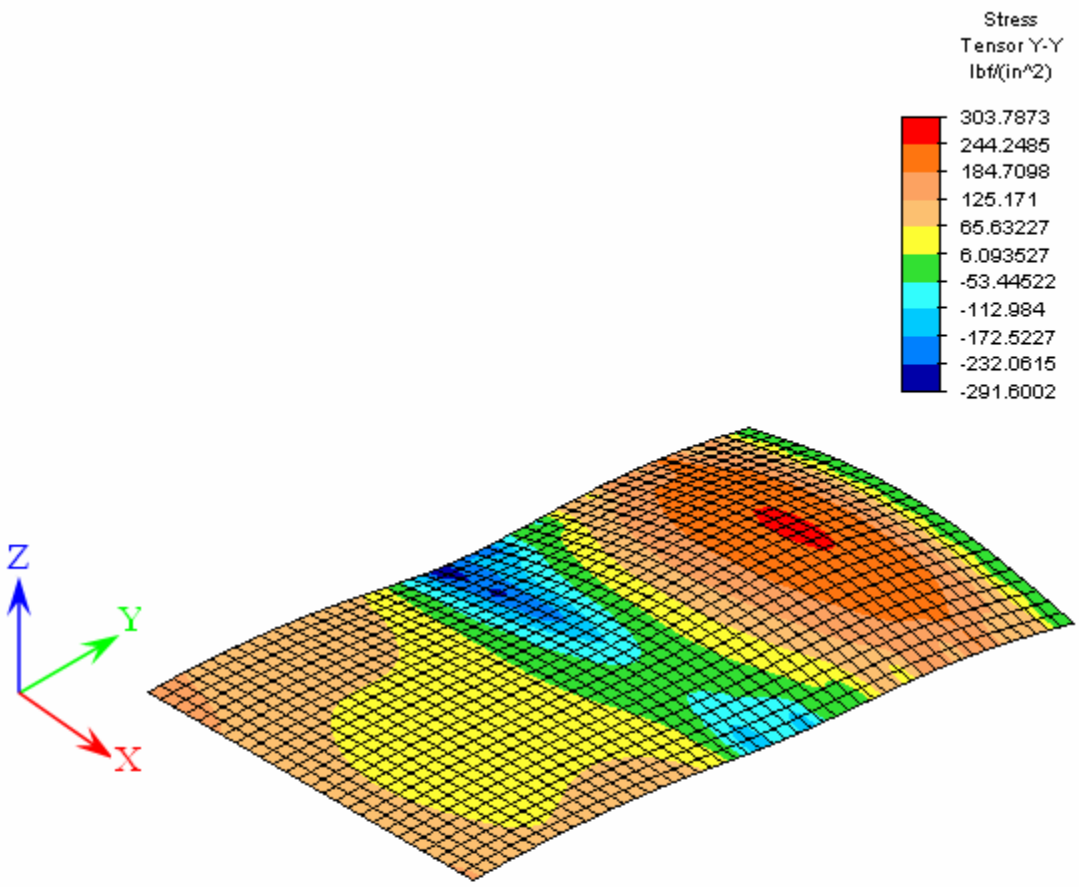

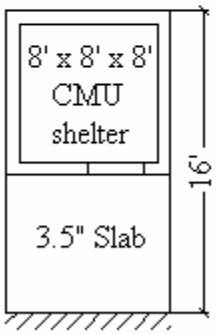

C-1 -Dead load only (Uniform stiffness) – 3.5" Slab		
Maximum Deflection (in)		σ_{max} (psi)
δ_{up}	δ_{down}	
-	0.17	304

Figure 4.2: 3.5in. slab supporting 8'x 8'x 8' CMU shelter (dead load only).

4.1.2 Light shelters

The weight of timber-steel shelter was found to be insufficient to counteract the overturning moment caused by the wind load. Further the slab received no resistance from soil against uplift, since the soil suction was neglected. The resultant moment acting on the slab caused it to be lifted up and rotate about the leeward edge of the shelter. The ALGOR results for all the slab shelter configurations are presented in the following paragraphs.

4.1.2.1 Configuration C-1

East-West direction was found to be the most critical wind direction for configuration C-1 with 8'x 4'x 8' timber shelter. The results for slab shelter configuration C-1 with 8'x 4'x 8' are shown in the Table 4.2.

Table 4.2: Results of configuration C-1 with 8'x 4'x 8' timber shelter.

8' x 4' x 8' Timber shelter								
C-1 with E-W wind	Box stiffness				Uniform stiffness			
Slab thickness, t (in)	Deflections (in)		σ_{max} (psi)	Figure No.	Deflections (in)		σ_{max} (psi)	Figure No.
	δ_{up}	δ_{down}			δ_{up}	δ_{down}		
3.5	0.14	0.04	1784	4.3	0.24	0.09	1607	4.4
5.5	0.09	0.01	1025	4.5	0.15	0.02	914	4.6

Both the slabs (3.5" and 5.5" thick) with box stiffness showed extensive cracking in the 2 ft area beyond the leeward edge of the shelter. Stress patterns indicated leeward edge of shelter to be subjected to uniform stress of high intensity. Comparing the stress values in

the above table with the limiting stress values as given in Table 3.3, we find that the 5.5 in thick slab is structurally competent. With # 5 reinforcement, the 5.5” slab can maintain its structural integrity even after cracking. The slabs with uniform thickness showed cracking in 2ft area on either sides of the leeward edge of the shelter. The stress values in slabs with uniform thickness were found to be less than those with box stiffness.

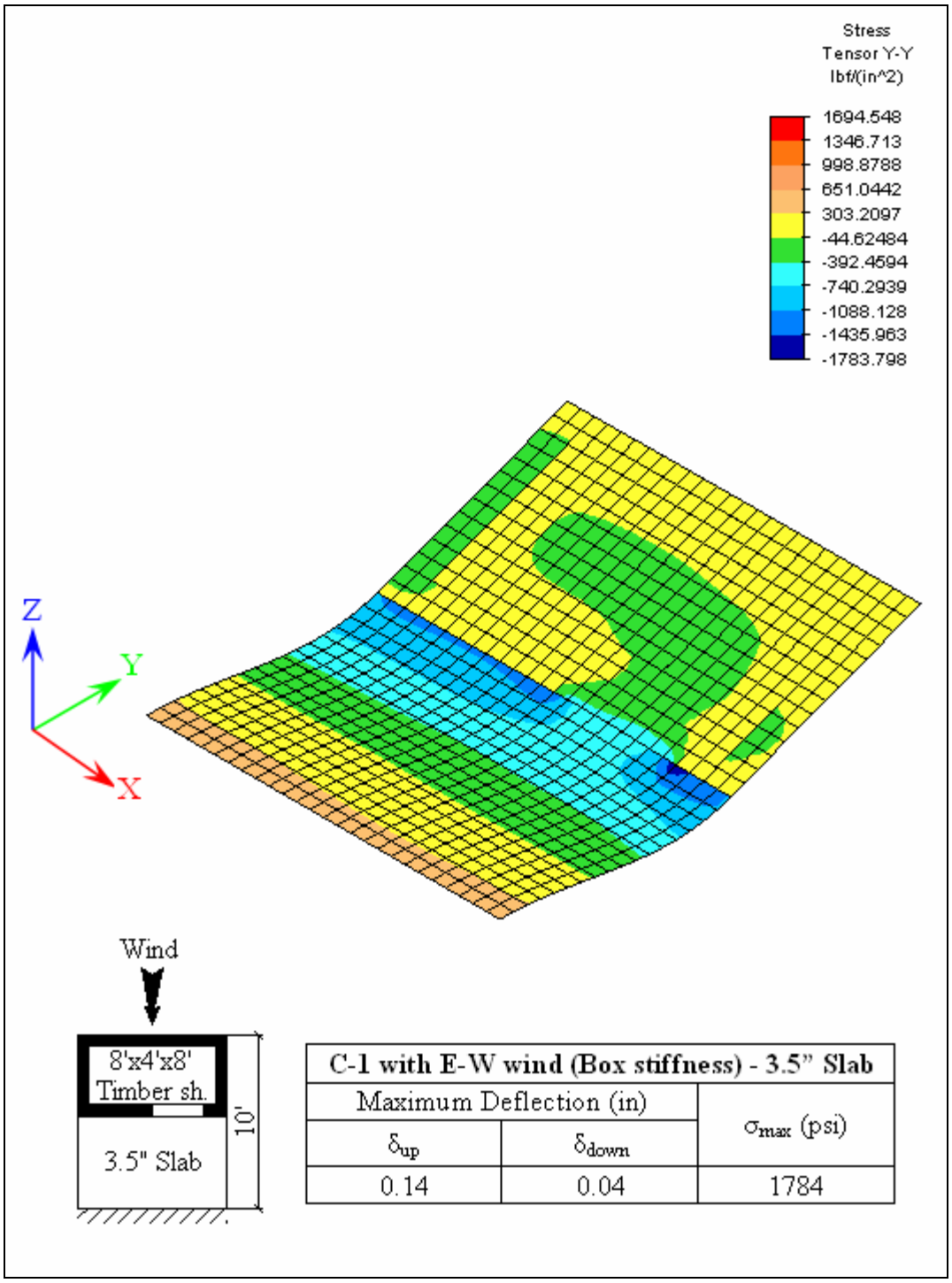

C-1 with E-W wind (Box stiffness) - 3.5" Slab		
Maximum Deflection (in)		σ_{max} (psi)
δ_{up}	δ_{down}	
0.14	0.04	1784

Figure 4.3: 3.5in. slab (C-1 with box stiffness) supporting 8'x 4'x 8' Timber shelter.

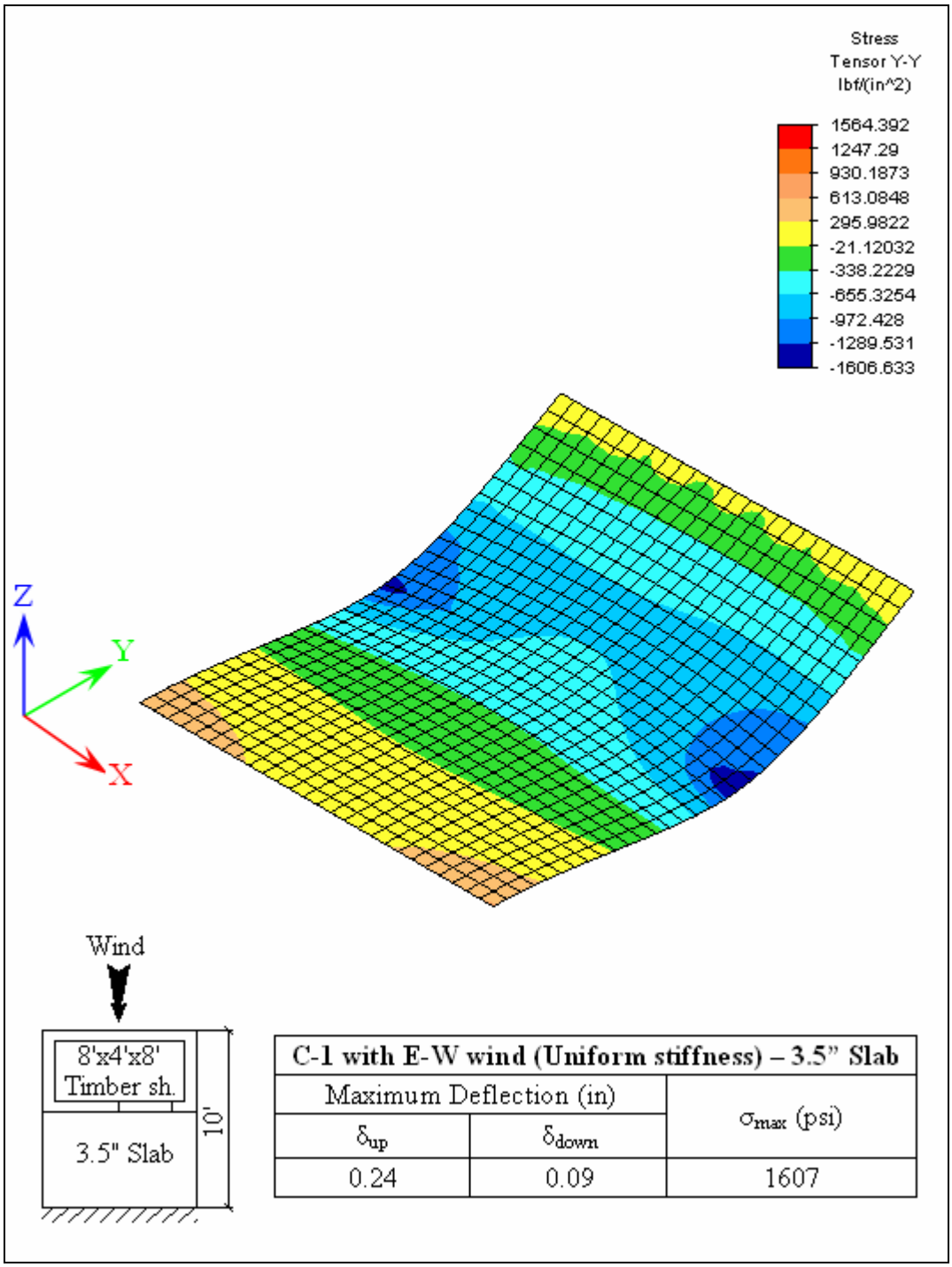

C-1 with E-W wind (Uniform stiffness) – 3.5" Slab		
Maximum Deflection (in)		σ_{max} (psi)
δ_{up}	δ_{down}	
0.24	0.09	1607

Figure 4.4: 3.5in. slab (C-1 with uniform stiffness) supporting 8'x 4'x 8' Timber shelter.

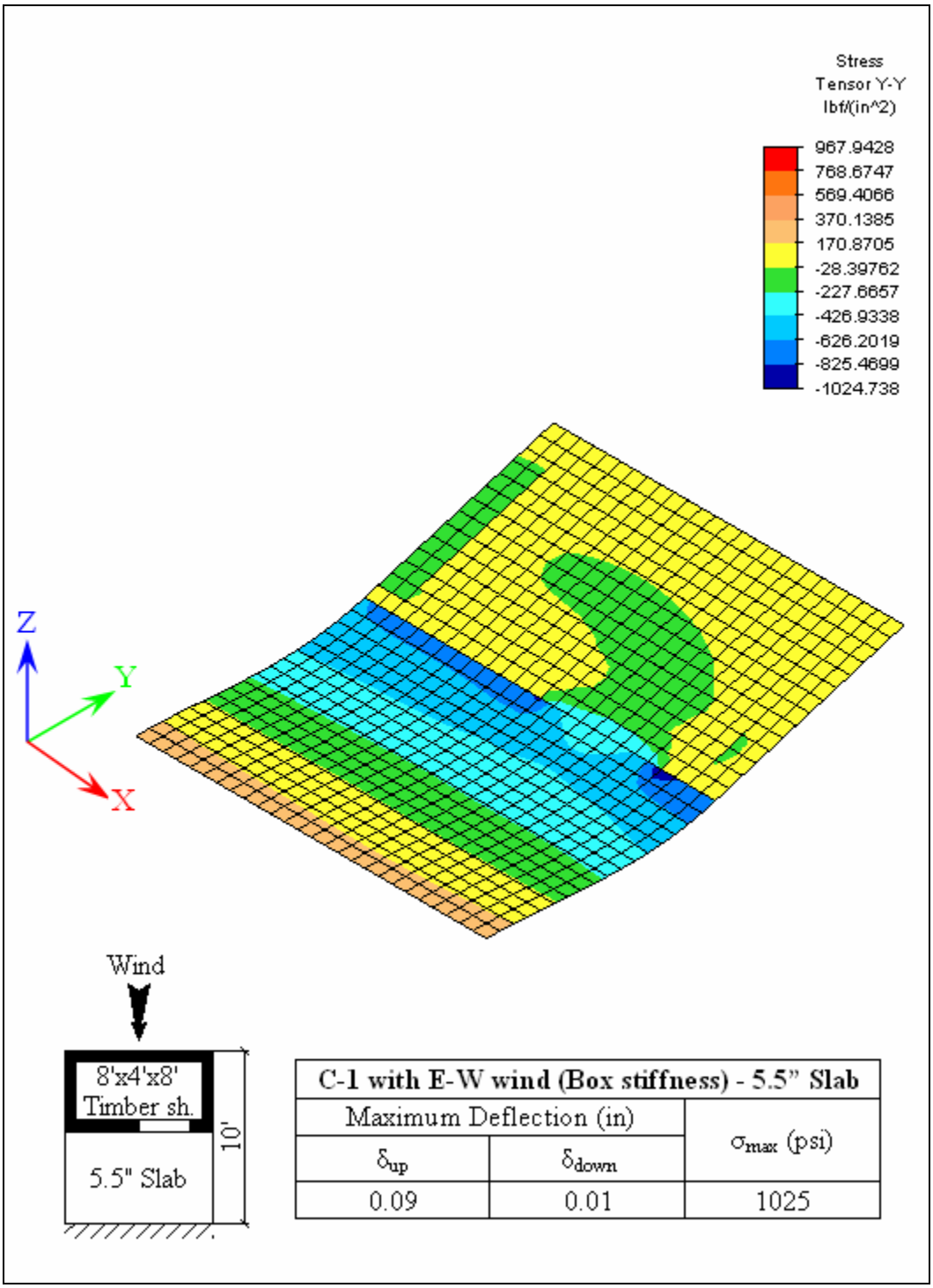

C-1 with E-W wind (Box stiffness) - 5.5" Slab		
Maximum Deflection (in)		σ_{max} (psi)
δ_{up}	δ_{down}	
0.09	0.01	1025

Figure 4.5: 5.5in. slab (C-1 with box stiffness) supporting 8'x 4'x 8' Timber shelter.

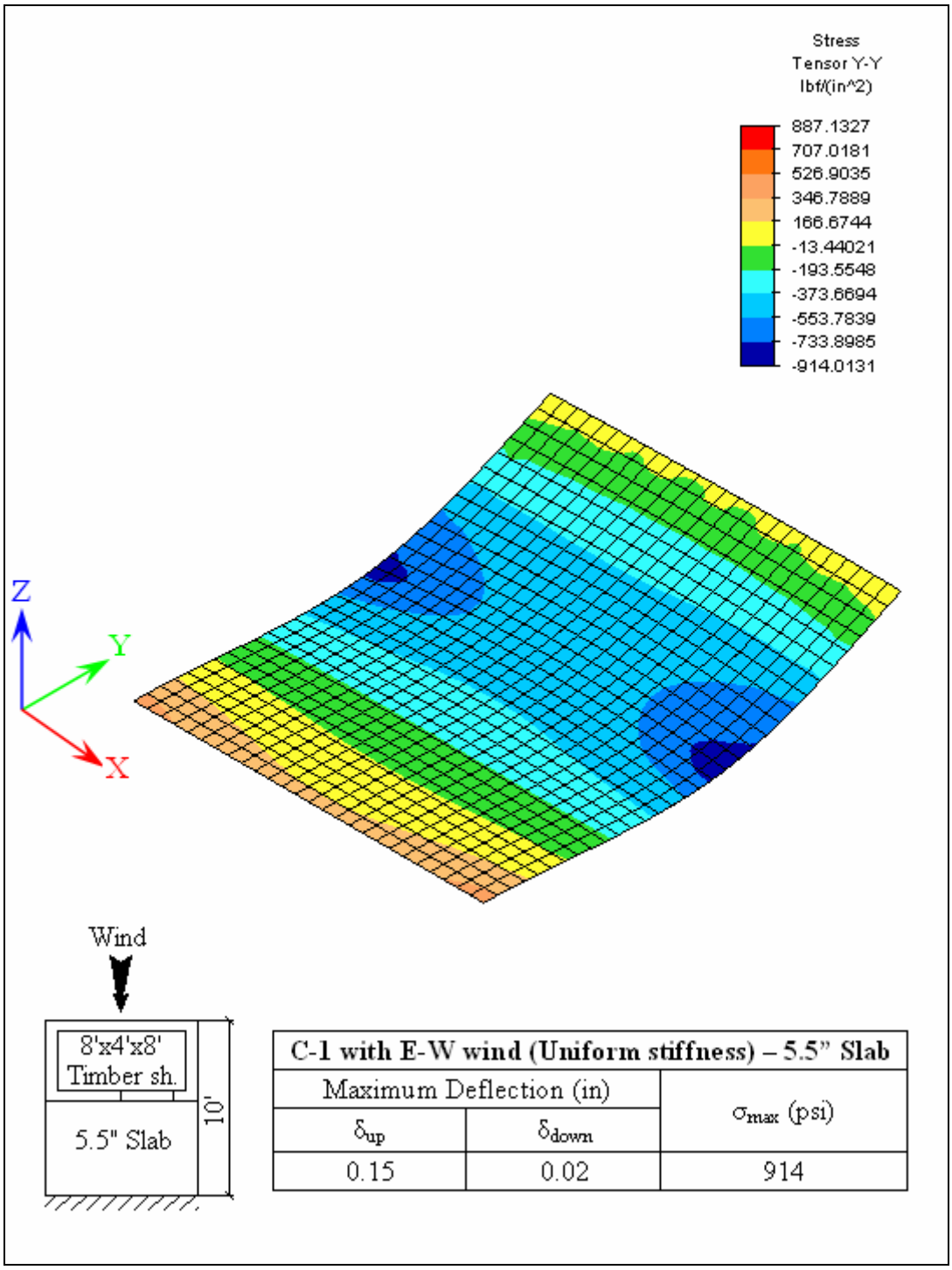

C-1 with E-W wind (Uniform stiffness) – 5.5" Slab		
Maximum Deflection (in)		σ_{max} (psi)
δ_{up}	δ_{down}	
0.15	0.02	914

Figure 4.6: 5.5in. slab (C-1 with uniform stiffness) supporting 8'x 4'x 8' Timber shelter.

The North-South direction was found to be the most critical wind direction for configuration C-1 with 8’x 8’x 8’ timber shelter. The results for slab shelter configuration C-1 with 8’x 8’x 8’ are shown in the Table 4.3.

Table 4.3: Results of configuration C-1 with 8’x 8’x 8’ timber shelter.

8' x 8' x 8' Timber shelter								
C-1 with N-S wind	Box stiffness				Uniform stiffness			
Slab thickness, t (in)	Deflections (in)		σ_{max} (psi)	Figure No.	Deflections (in)		σ_{max} (psi)	Figure No.
	δ_{up}	δ_{down}			δ_{up}	δ_{down}		
3.5	0.1	0.05	871	4.7	0.25	0.13	496	4.8

The 3.5” slab with box stiffness showed a stress concentration at the north and south corners of the leeward edge of the shelter. Considering the localized nature of the cracking and the maximum stress values reached, 3.5” slab with # 4 steel can be assumed to perform efficiently without structural failure. The 3.5” slab with uniform stiffness showed minor cracking near the fixed edge.

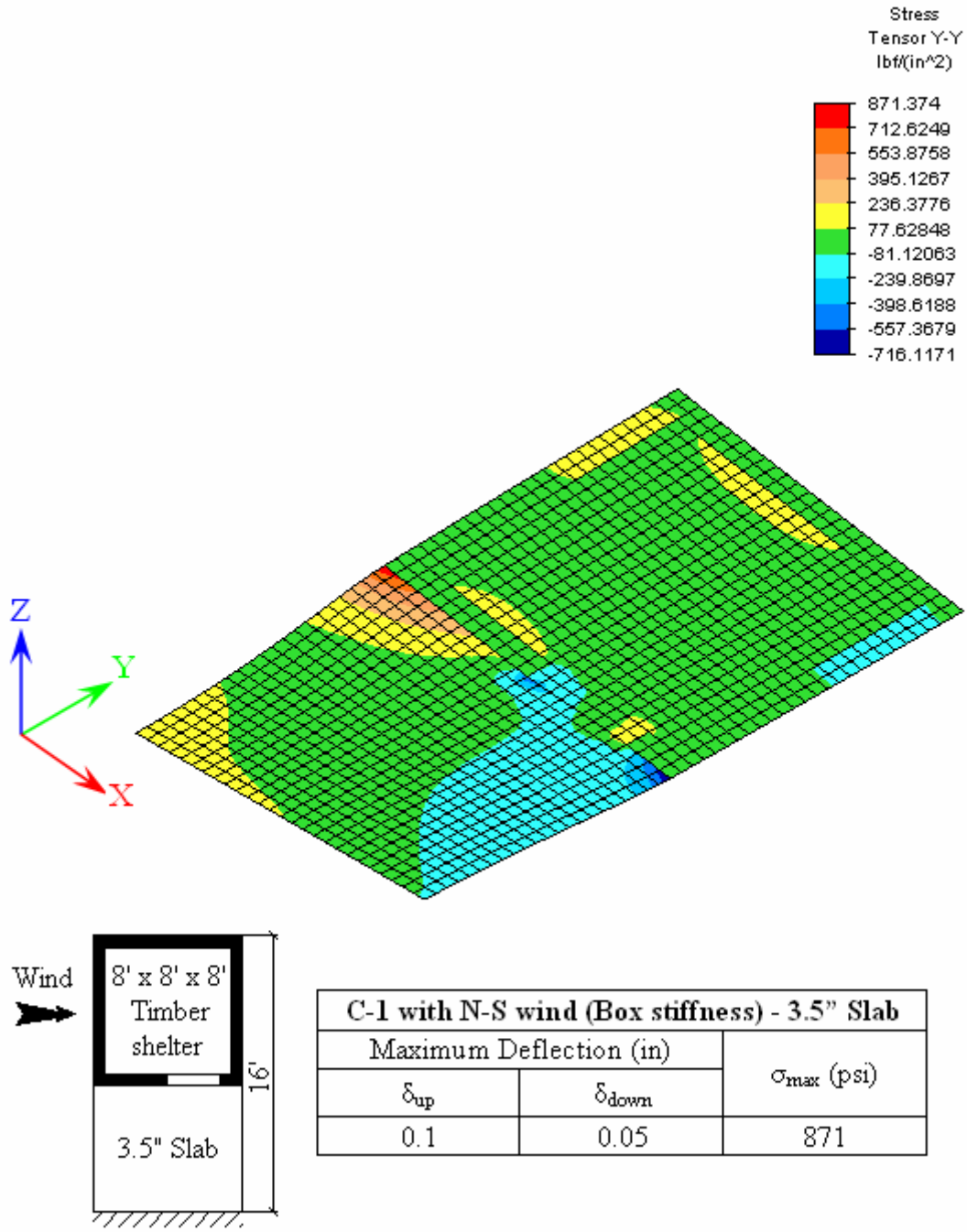

C-1 with N-S wind (Box stiffness) - 3.5" Slab		
Maximum Deflection (in)		σ_{max} (psi)
δ_{up}	δ_{down}	
0.1	0.05	871

Figure 4.7: 3.5in. slab (C-1 with box stiffness) supporting 8'x 8'x 8' Timber shelter.

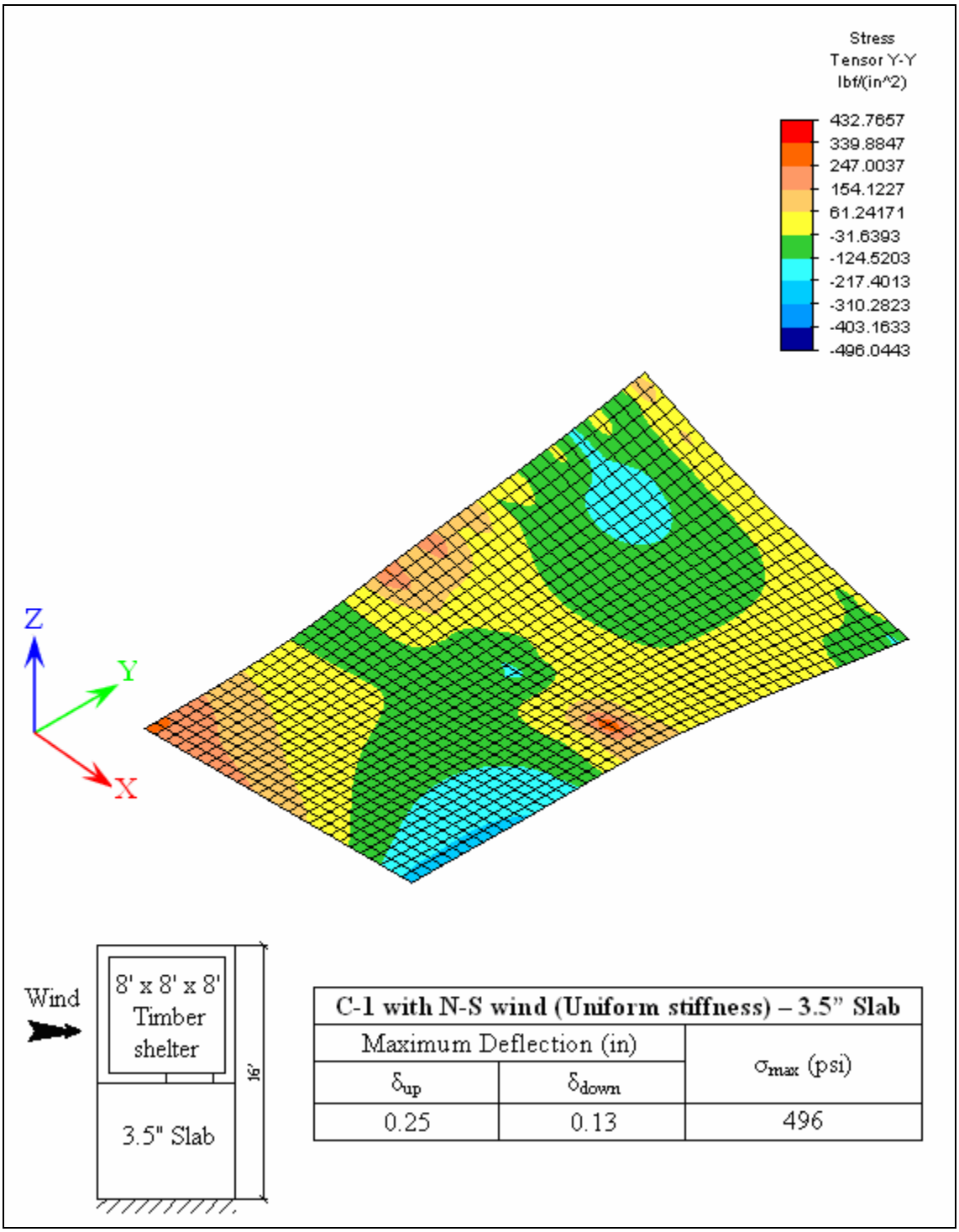

C-1 with N-S wind (Uniform stiffness) – 3.5" Slab		
Maximum Deflection (in)		σ_{max} (psi)
δ_{up}	δ_{down}	
0.25	0.13	496

Figure 4.8: 3.5in. slab (C-1 with uniform stiffness) supporting 8'x 8'x 8' Timber shelter.

4.1.2.2 Configuration C-2

East-West direction was found to be the most critical wind direction for configuration C-2 with both; 8'x 4'x 8' and 8'x 8'x 8' timber shelters. The results for slab shelter configuration C-2 with 8'x 4'x 8' are shown in the Table 4.4.

Table 4.4: Results of configuration C-2 with 8'x 4'x 8' timber shelter.

8' x 4' x 8' Timber shelter								
C-2 with E-W wind	Box stiffness				Uniform stiffness			
Slab thickness, t (in)	Deflections (in)		σ_{max} (psi)	Figure No.	Deflections (in)		σ_{max} (psi)	Figure No.
	δ_{up}	δ_{down}			δ_{up}	δ_{down}		
3.5	0.09	0.04	1276	4.9	0.18	0.04	912	4.10

Both the slabs (3.5" and 5.5" thick) with box stiffness showed extensive cracking in 2 ft area beyond the leeward edge of the shelter. Stress patterns indicated the leeward edge of shelter to be subjected to uniform stress of high intensity. In the case of 3.5" slab a few elements at the corners of leeward edge of shelter showed stresses higher than the limiting stresses as indicated by Table 3.3. Taking into consideration the duration of the wind event (3-sec gust wind speed was considered), resistance offered by soil (suction), and anchorage strength of slab reinforcement it can be assumed that the 3.5" slab with #4 steel would perform safely without structural failure. The 3.5" slab with uniform thickness showed cracking in 2ft to 3ft area on either sides of the leeward edge. The stress values in slabs with uniform thickness were found to be less than those with box stiffness.

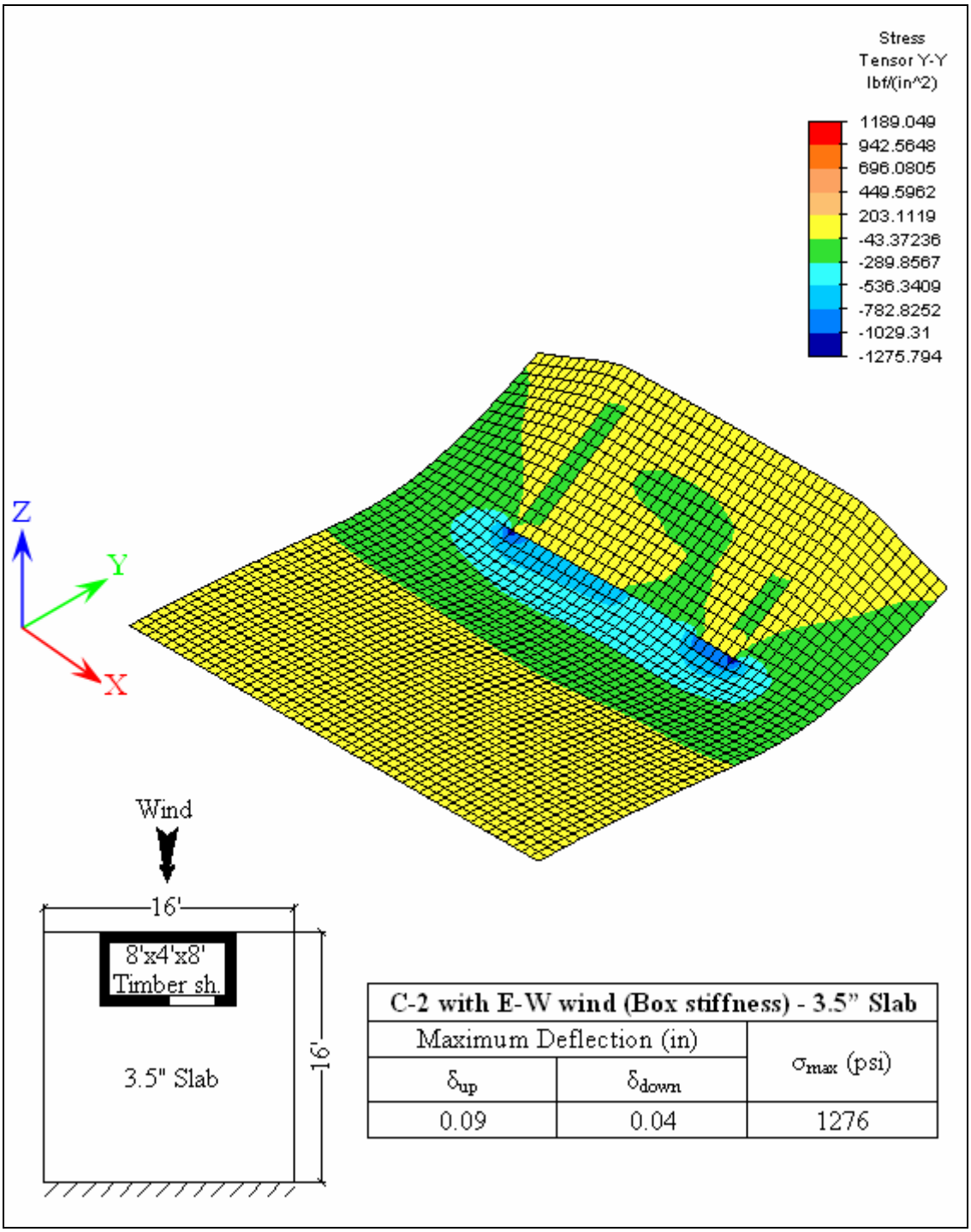

C-2 with E-W wind (Box stiffness) - 3.5" Slab		
Maximum Deflection (in)		σ_{max} (psi)
δ_{up}	δ_{down}	
0.09	0.04	1276

Figure 4.9: 3.5in. slab (C-2 with box stiffness) supporting 8'x 4'x 8' Timber shelter.

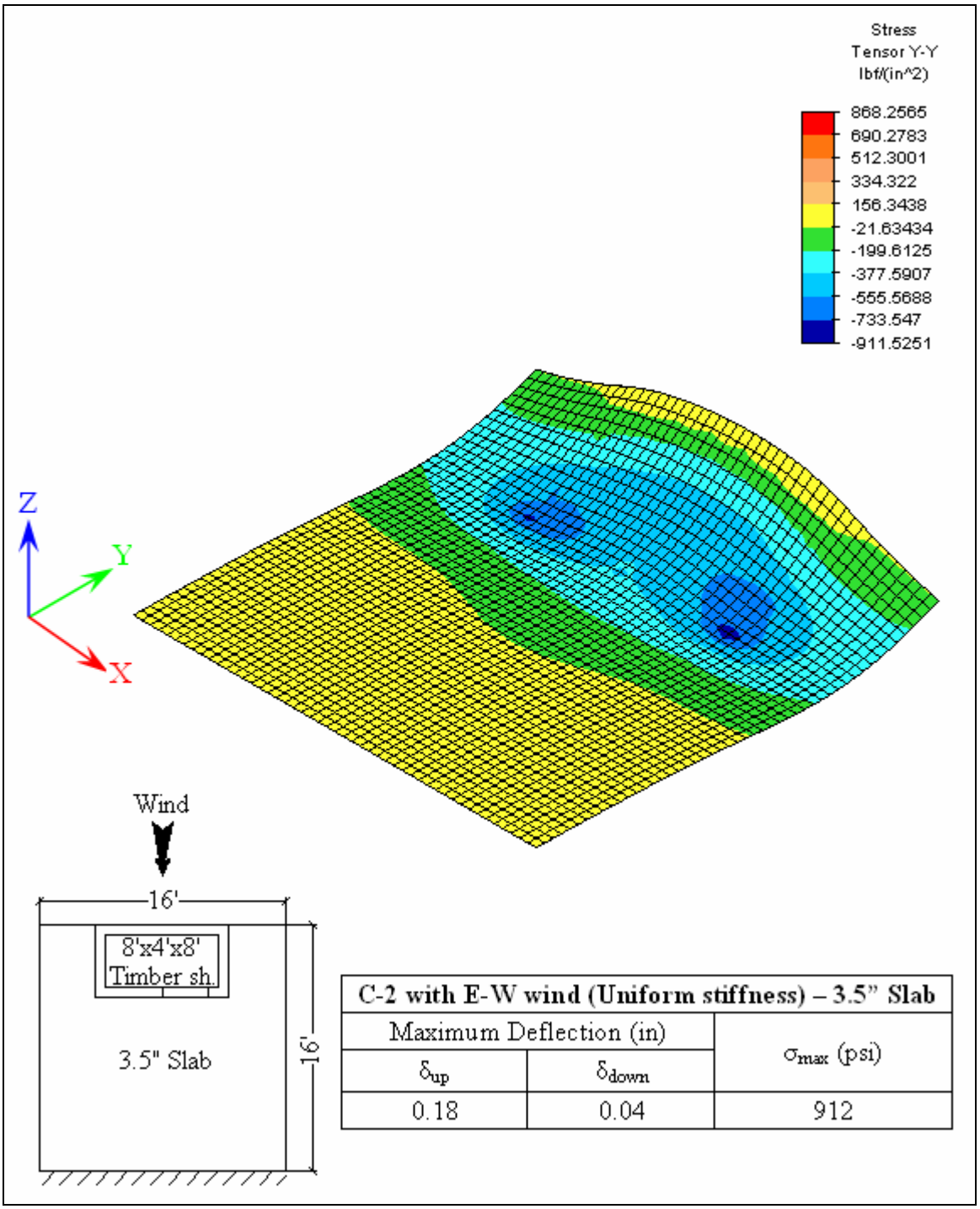

C-2 with E-W wind (Uniform stiffness) – 3.5" Slab		
Maximum Deflection (in)		σ_{max} (psi)
δ_{up}	δ_{down}	
0.18	0.04	912

Figure 4.10: 3.5in. slab (C-2 with uniform stiffness) supporting 8'x 4'x 8' Timber shelter.

The results for slab shelter configuration C-2 with 8’x 8’x 8’ are shown in the Table 4.5.

Table 4.5: Results of configuration C-2 with 8’x 8’x 8’ timber shelter.

8' x 8' x 8' Timber shelter								
C-2 with E-W wind	Box stiffness				Uniform stiffness			
Slab thickness, t (in)	Deflections (in)		σ_{max} (psi)	Figure No.	Deflections (in)		σ_{max} (psi)	Figure No.
	δ_{up}	δ_{down}			δ_{up}	δ_{down}		
3.5	0.06	0.02	606	4.11	0.13	0.03	301	4.12

The 3.5” slab with box stiffness showed extensive cracking in 1 ft area beyond the leeward edge of the shelter. Based on the maximum stress values reached a 3.5” slab with # 4 steel can be assumed to perform efficiently without structural failure. The 3.5” slab with uniform stiffness showed no cracking.

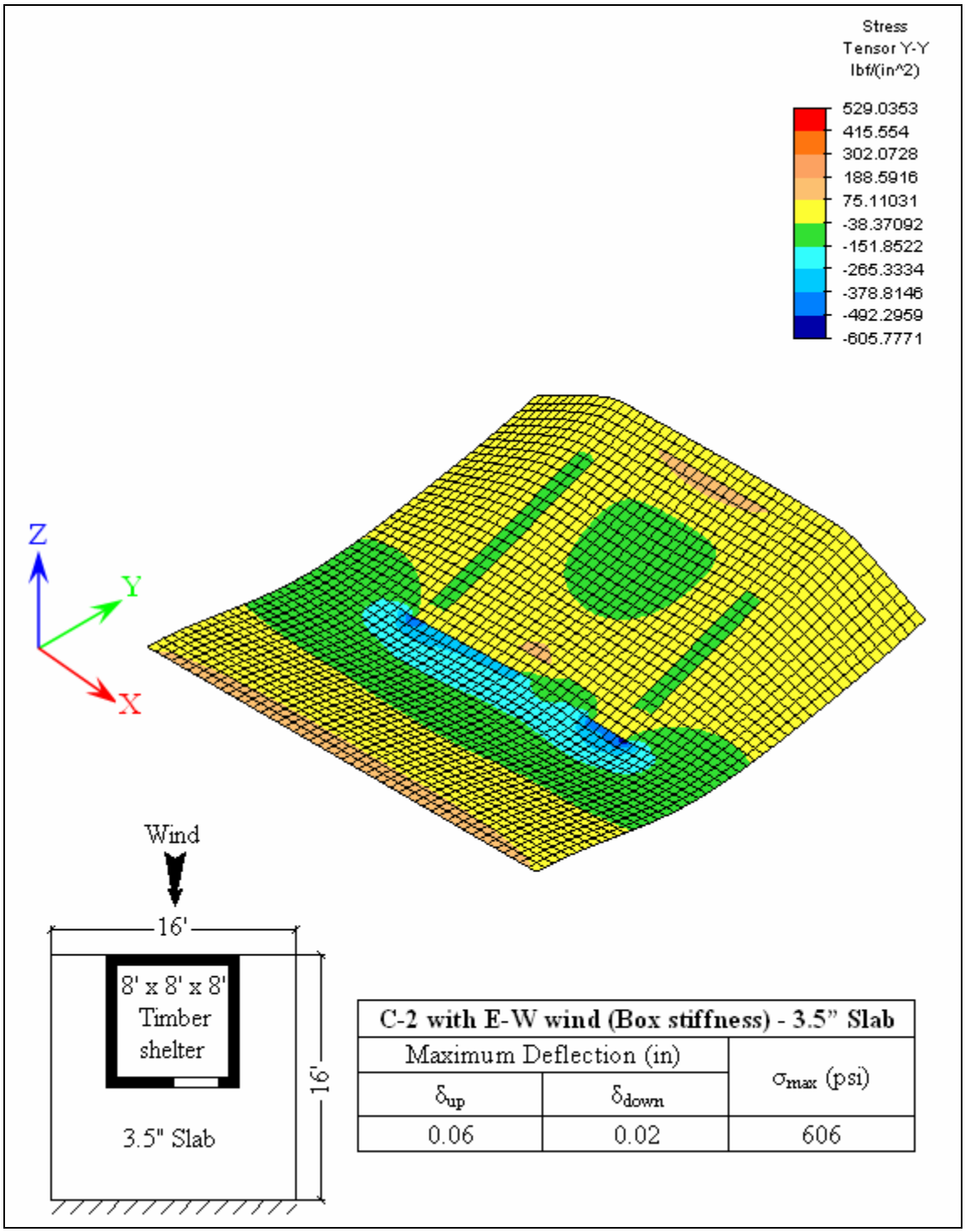

C-2 with E-W wind (Box stiffness) - 3.5" Slab		
Maximum Deflection (in)		σ_{max} (psi)
δ_{up}	δ_{down}	
0.06	0.02	606

Figure 4.11: 3.5in. slab (C-2 with box stiffness) supporting 8'x 8'x 8' Timber shelter.

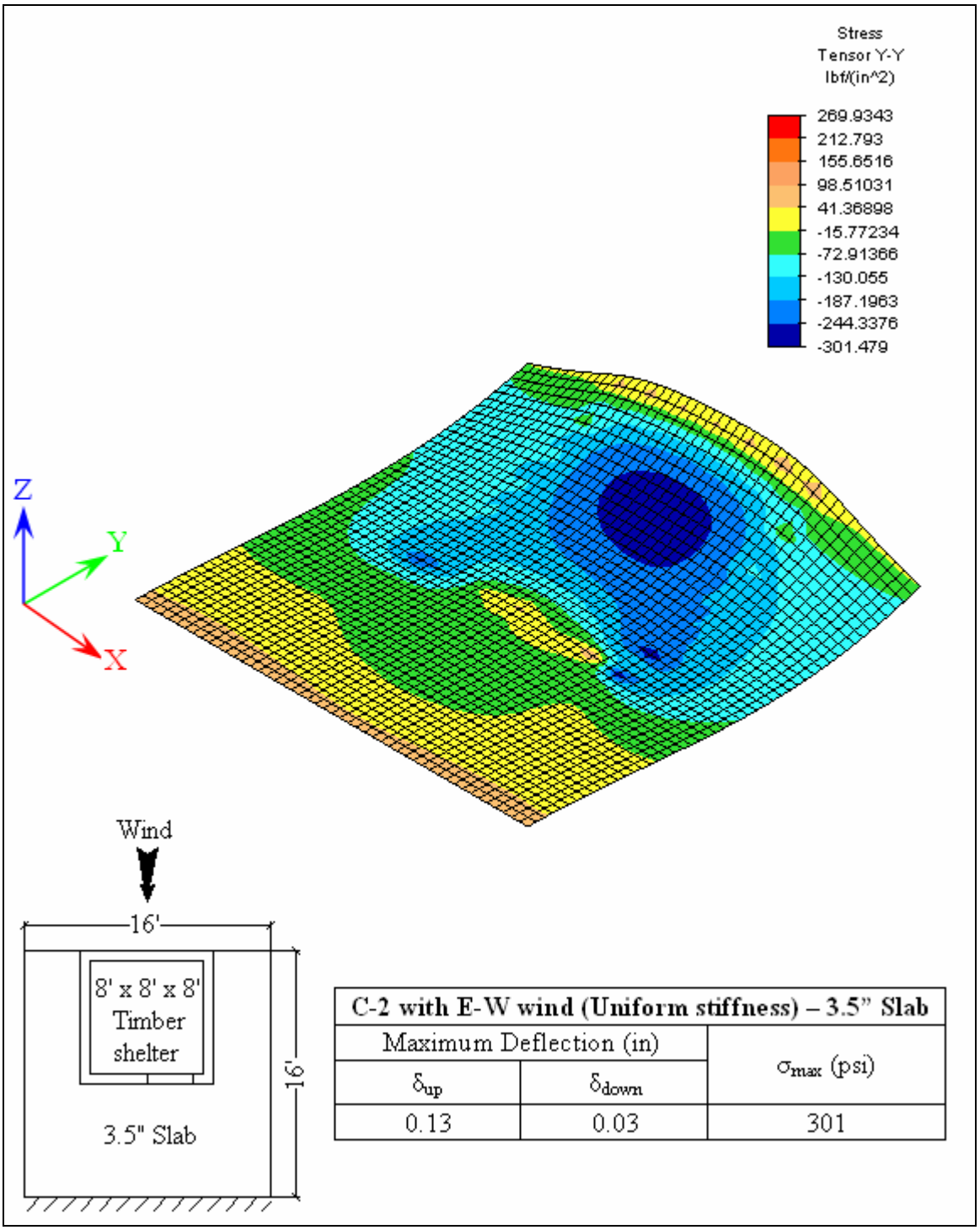

C-2 with E-W wind (Uniform stiffness) – 3.5" Slab		
Maximum Deflection (in)		σ_{max} (psi)
δ_{up}	δ_{down}	
0.13	0.03	301

Figure 4.12: 3.5in. slab (C-2 with uniform stiffness) supporting 8'x 8'x 8' Timber shelter.

4.1.2.3 Configuration C-3

East-West direction was found to be the most critical wind direction for configuration C-3 with both; 8'x 4'x 8' and 8'x 8'x 8' timber shelters. The results for slab shelter configuration C-3 with 8'x 4'x 8' are shown in the Table 4.6.

Table 4.6: Results of configuration C-3 with 8'x 4'x 8' timber shelter.

8' x 4' x 8' Timber shelter								
C-3 with E-W wind	Box stiffness				Uniform stiffness			
Slab thickness, t (in)	Deflections (in)		σ_{max} (psi)	Figure No.	Deflections (in)		σ_{max} (psi)	Figure No.
	δ_{up}	δ_{down}			δ_{up}	δ_{down}		
3.5	0.12	0.04	1656	4.13	0.24	0.09	1550	4.14
5.5	0.08	0.03	1073	4.15	0.14	0.04	848	4.16

Both the slabs (3.5" and 5.5" thick) with box stiffness showed extensive cracking in 2 ft area beyond the leeward edge of the shelter. Stress patterns were similar to configuration C-1. Comparing the stress values in the above table with the limiting stress values as given in Table 3.3, we find that 5.5 in thick slab is structurally competent. With # 5 steel, the 5.5" slab can maintain its structural integrity even after cracking. The slabs with uniform thickness showed cracking in 2ft area on either sides of the leeward edge of the shelter. The stress values in slabs with uniform thickness were found to be less than those with box stiffness.

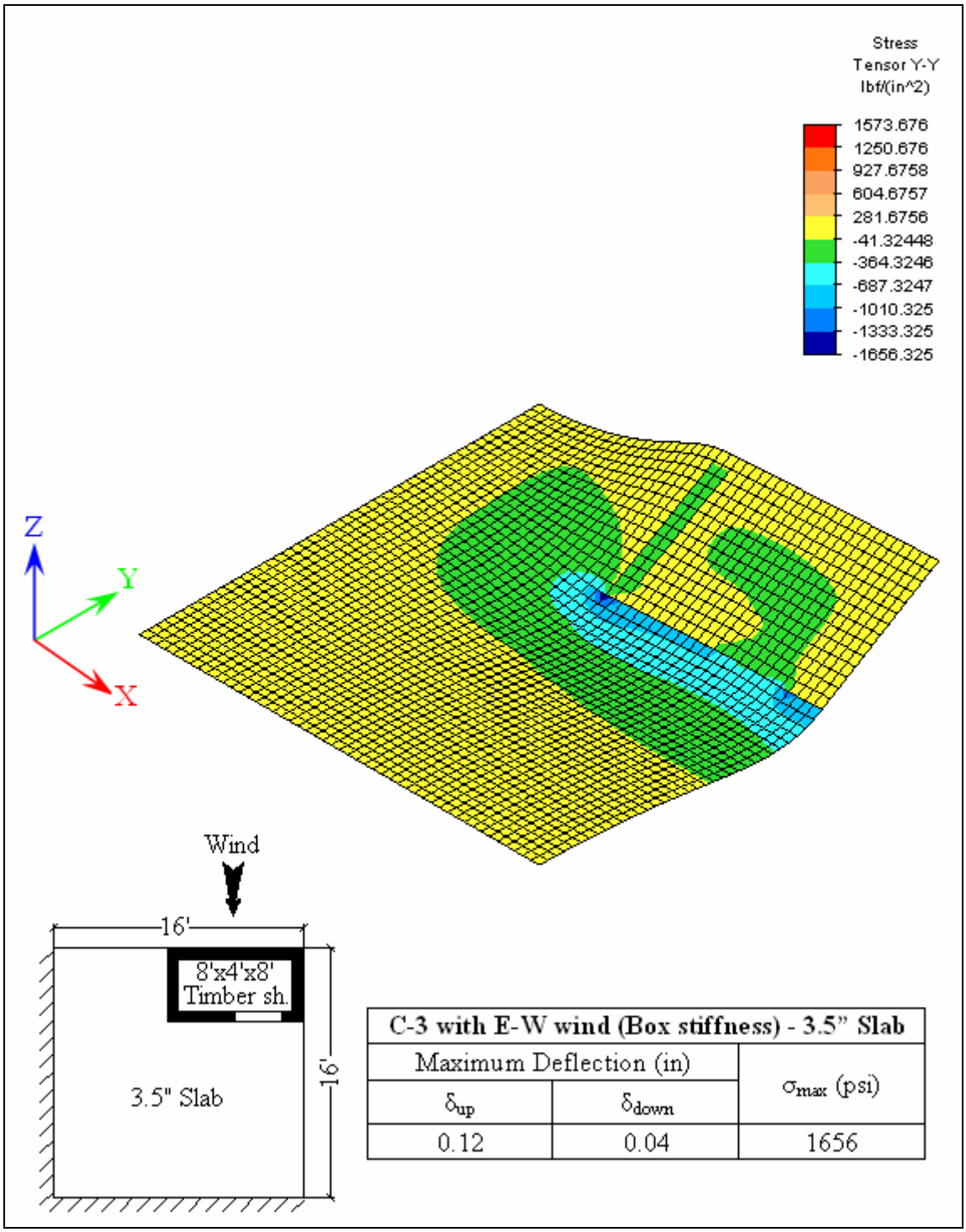

C-3 with E-W wind (Box stiffness) - 3.5" Slab		
Maximum Deflection (in)		σ_{max} (psi)
δ_{up}	δ_{down}	
0.12	0.04	1656

Figure 4.13: 3.5in. slab (C-3 with box stiffness) supporting 8'x 4'x 8' Timber shelter.

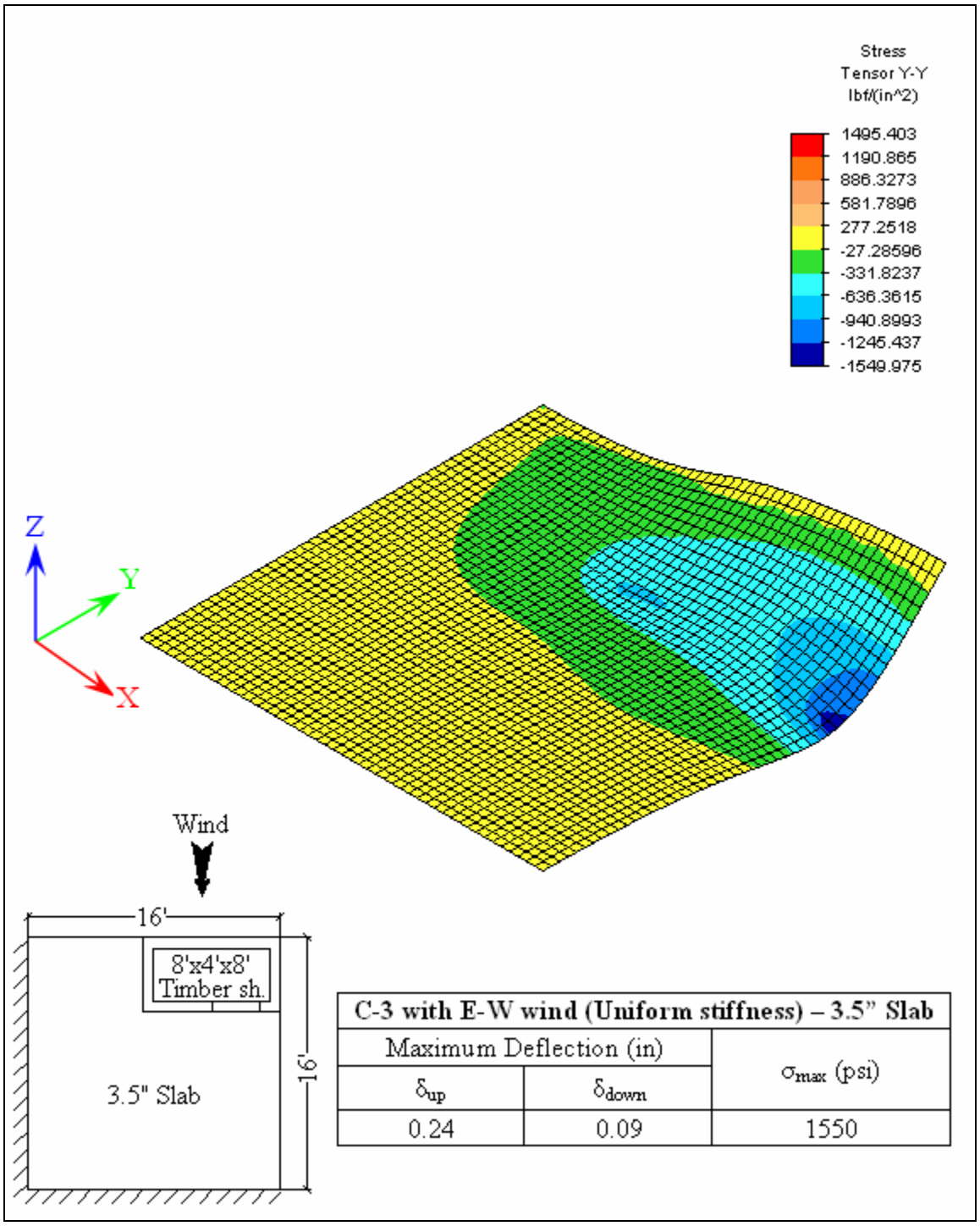

C-3 with E-W wind (Uniform stiffness) – 3.5" Slab		
Maximum Deflection (in)		σ_{max} (psi)
δ_{up}	δ_{down}	
0.24	0.09	1550

Figure 4.14: 3.5in. slab (C-3 with uniform stiffness) supporting 8'x 4'x 8' Timber shelter.

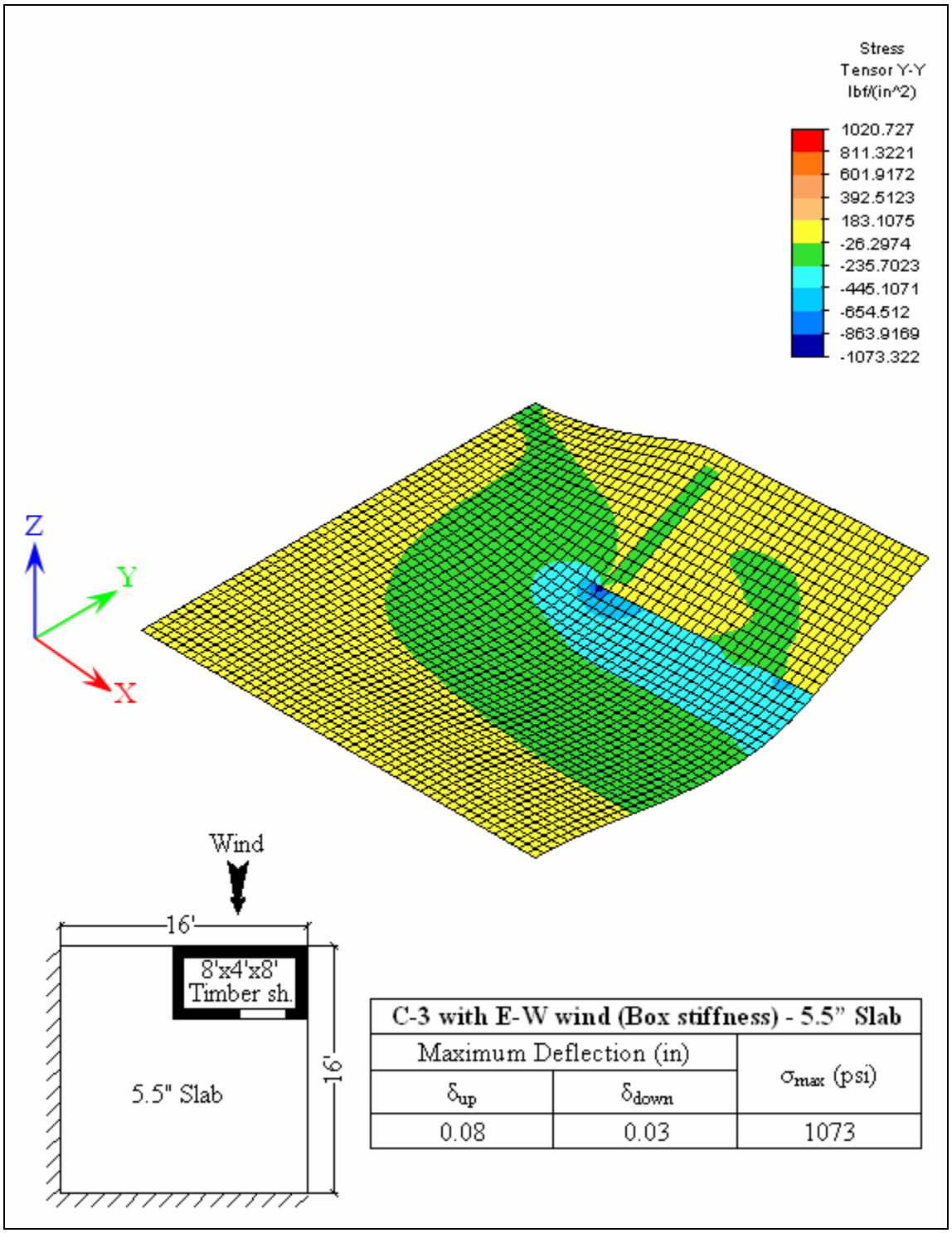

C-3 with E-W wind (Box stiffness) - 5.5" Slab		
Maximum Deflection (in)		σ_{max} (psi)
δ_{up}	δ_{down}	
0.08	0.03	1073

Figure 4.15: 5.5in. slab (C-3 with box stiffness) supporting 8'x 4'x 8' Timber shelter.

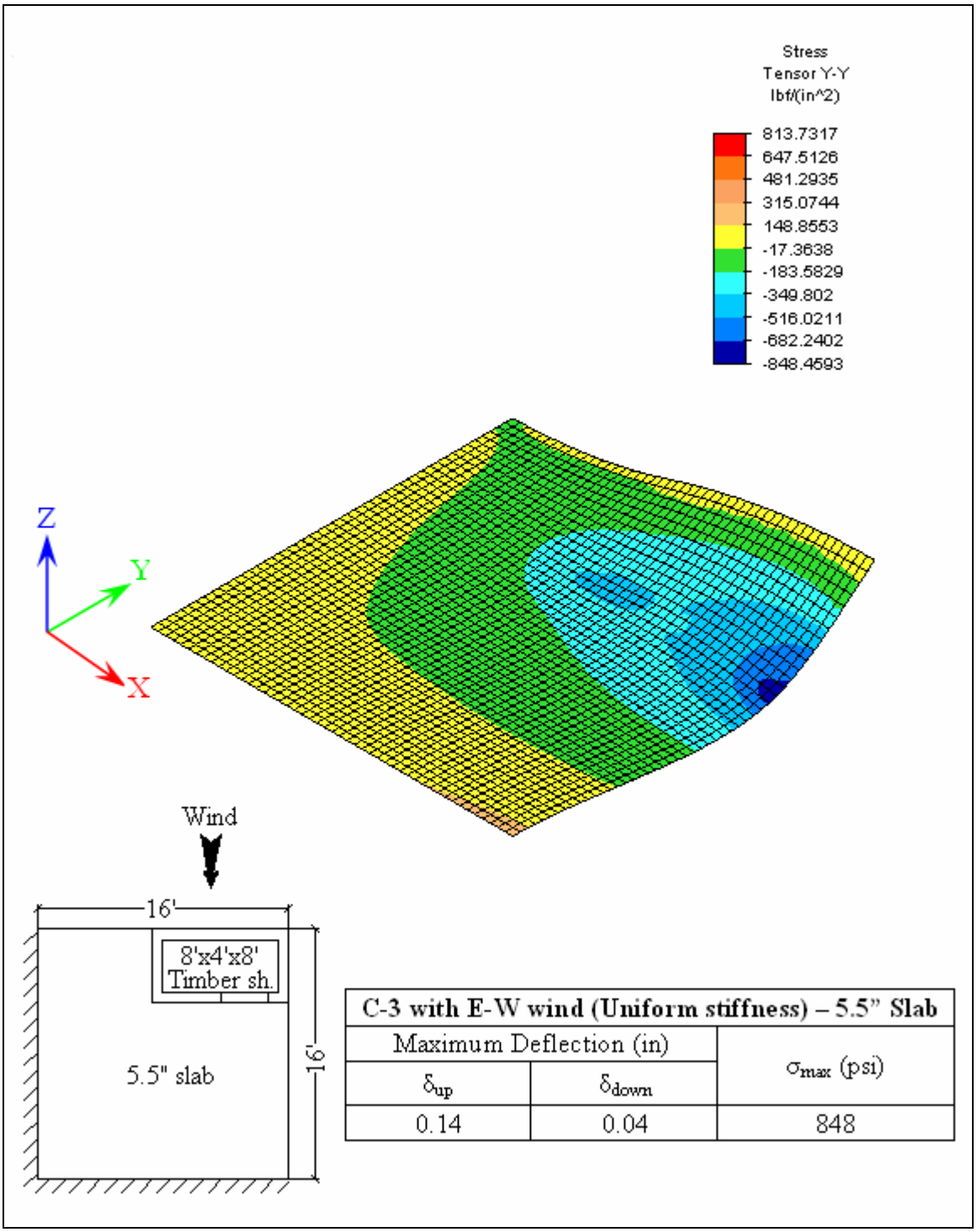

C-3 with E-W wind (Uniform stiffness) – 5.5" Slab		
Maximum Deflection (in)		σ_{max} (psi)
δ_{up}	δ_{down}	
0.14	0.04	848

Figure 4.16: 5.5in. slab (C-3 with uniform stiffness) supporting 8'x 4'x 8' Timber shelter.

The results for slab shelter configuration C-3 with 8’x 8’x 8’ are shown in the Table 4.7.

Table 4.7: Results of configuration C-3 with 8’x 8’x 8’ timber shelter.

8' x 8' x 8' Timber shelter								
C-3 with E-W wind	Box stiffness				Uniform stiffness			
Slab thickness, t (in)	Deflections (in)		σ_{max} (psi)	Figure No.	Deflections (in)		σ_{max} (psi)	Figure No.
	δ_{up}	δ_{down}			δ_{up}	δ_{down}		
3.5	0.09	0.03	836	4.17	0.21	0.05	537	4.18

It was observed that 3.5” slab with box stiffness showed minor cracking extending 1 foot from the corners of the leeward edge of the shelter. Also, 3.5” slab with uniform thickness showed sever cracking at the south corner of the leeward edge of shelter. Based on the maximum stress values reached, a 3.5” slab with # 4 steel can be assumed to perform efficiently without structural failure. Based on the conservative assumptions discussed earlier in this chapter, it can be assumed that the 3.5” slab would perform safely without structural failure.

Configuration C-3 was found to be more critical than configuration C-2 and less critical than configuration C-1. This indicates that offset of slab beyond the shelter edges is important to reduce the flexural stresses. Also, providing the on all four sides will help in reducing the thickness of slab.

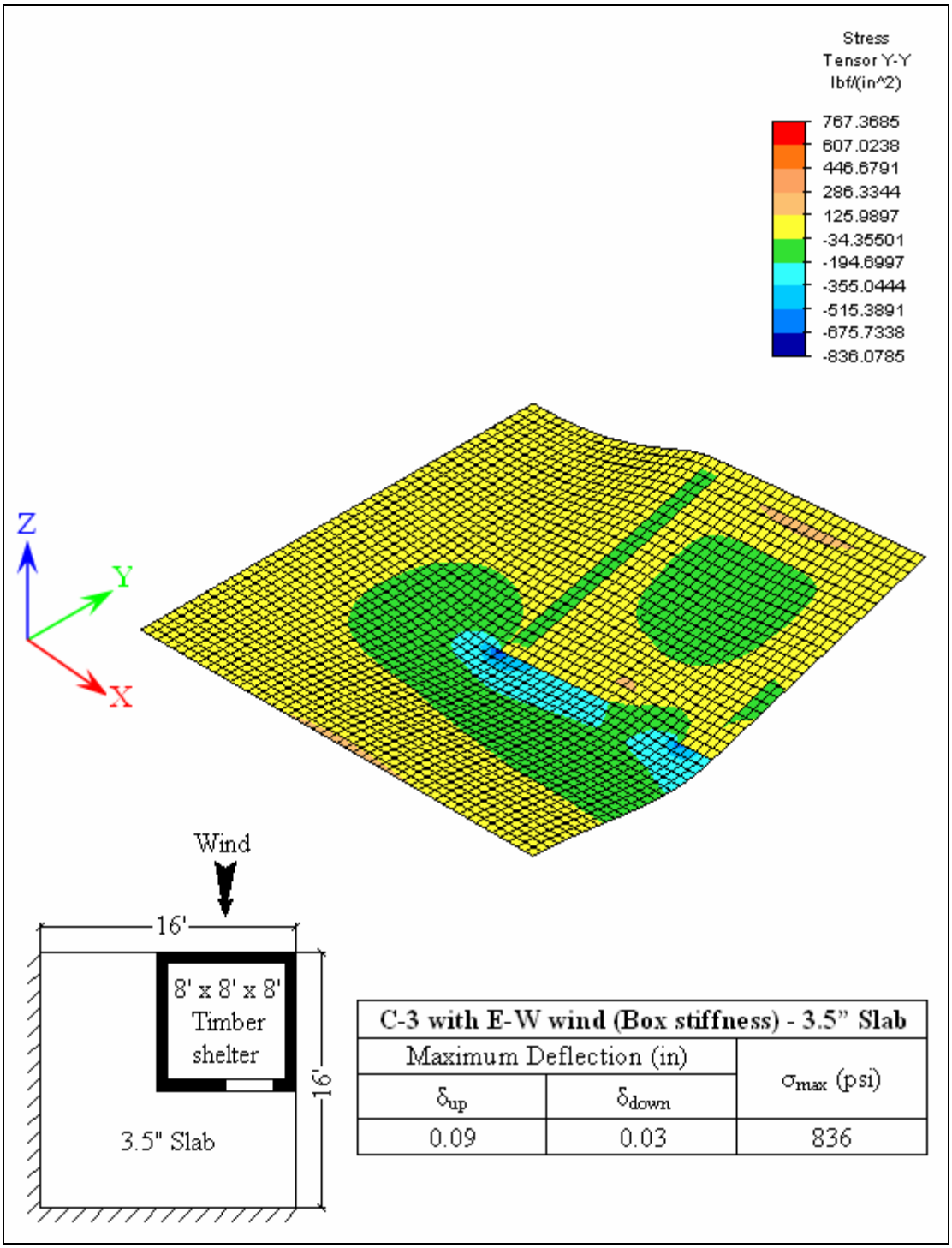

C-3 with E-W wind (Box stiffness) - 3.5" Slab		
Maximum Deflection (in)		σ_{max} (psi)
δ_{up}	δ_{down}	
0.09	0.03	836

Figure 4.17: 3.5in. slab (C-3 with box stiffness) supporting 8'x 8'x 8' Timber shelter.

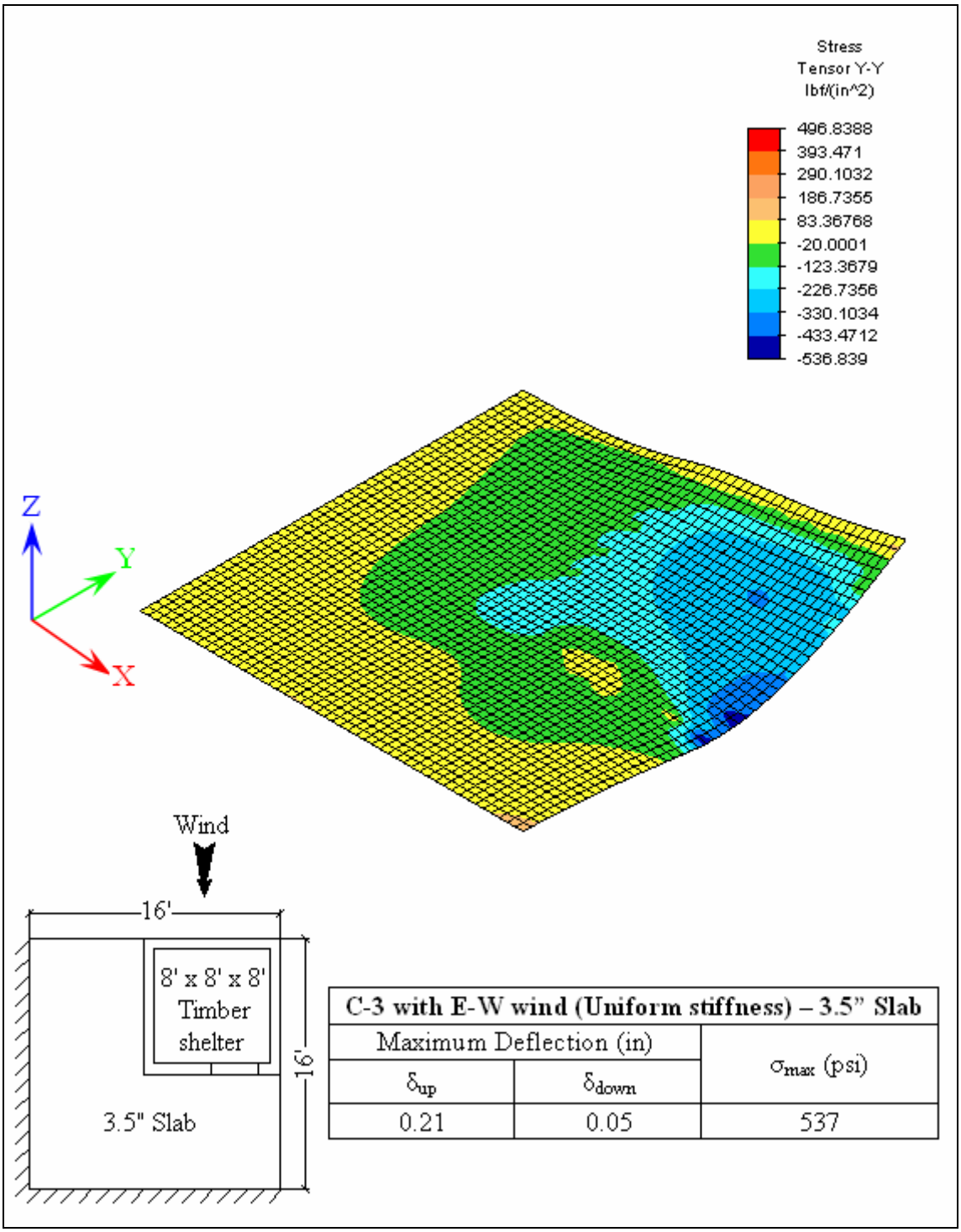

C-3 with E-W wind (Uniform stiffness) – 3.5" Slab		
Maximum Deflection (in)		σ_{max} (psi)
δ_{up}	δ_{down}	
0.21	0.05	537

Figure 4.18: 3.5in. slab (C-3 with uniform stiffness) supporting 8'x 8'x 8' Timber shelter.

4.1.2.4 Configuration C-4

Isolated storm shelters were considered in configuration C-4. Slab thickness was computed based on stability against overturning about the leeward edge of slab. It was assumed that the overturning caused by the extreme wind about the leeward edge of slab is equal to the moment of resultant dead load (weight of slab and shelter) about the leeward edge of slab. The resistance offered by the passive pressure and skin friction of soil was not taken into account. The offset provided to the slab on all sides, beyond the shelter edges, determined the size of the slab. The calculations of this dead load analysis are shown in appendix C. Table 4.8 provides the results of the analysis.

Table 4.8: Slab supporting isolated timber-steel shelters.

Shelter size, ft.	Offset (ft)	Slab Thickness, (in)
8 x 4 x 8	1	32.0
	2	17.0
	3	10.0
	4	7.0
8 x 8 x 8	1	18.0
	2	12.0
	3	8.0
	4	6.0

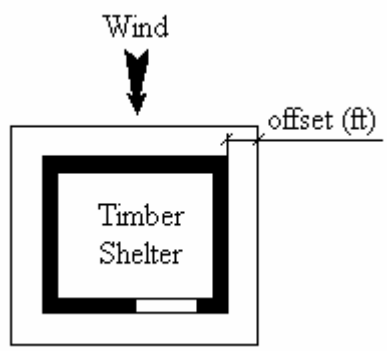

4.1.2.5 Soft and stiff soil

FEMA 320 suggests 2000 psf as the minimum soil bearing capacity to be used for storm shelters. The slab was analyzed for maximum stresses with soft soil (1500 psf) and stiff soil (20000 psf). This analysis was carried out with the intension of understanding the behavior of slab with different soil stiffness. Following table shows the maximum flexural stresses in the 3.5" thick slab for different soil bearing capacities:

Table 4.9: 3.5" thick slab supported on soil of different bearing capacities.

Maximum flexural stress in 3.5" thick slab (σ_{yy}), psi							
Soil bearing capacity:-		Soft soil 1500 psf		FEMA soil 2000 psf		Stiff soil 20000 psf	
Timber-steel shelters		Box stiffness	Uniform stiffness	Box stiffness	Uniform stiffness	Box stiffness	Uniform stiffness
8'x 4'x 8'	C-1 (E-W)	1940	1743	1784	1607	808	790
	C-2 (E-W)	1376	975	1276	912	631	534
	C-3 (E-W)	1834	1664	1656	1550	725	797
8'x 8'x 8'	C-1 (N-S)	981	506	871	496	395	408
	C-2 (E-W)	686	329	606	301	239	223
	C-3 (E-W)	976	592	836	537	287	338

As expected, a reduction in soil bearing capacity caused the flexural stress in the slab to increase, while soil supported on stiff soil showed reduction in the flexural stresses in the slab. It can be deduced from the results that the sensitivity of slabs with box stiffness is governed by the sudden change of stiffness at the leeward edge of shelter and the

magnitude of loads applied to the slab. For slabs with uniform stiffness, the magnitude of loads applied to the slab is the governing factor.

4.2 Pullout strength of concrete slab

The concrete breakout strength (pullout strength) of 3000 psi concrete with 2 1/8" embedment depth of anchor bolt, was found to be 5090 lbf for uncracked section and 4072 lbf for cracked section (refer appendix F). The maximum pullout force experienced by the concrete slab supporting the 8'x 4'x 8'timber shelter was 3460 lbf (refer Table D.2, appendix D). In the case of concrete slab supporting the 8'x 8'x 8'timber shelter, the maximum pullout force was found to be 3420 lbf (refer Table D.7, appendix D). These results indicate that the concrete is safe against local shear failure at slab-shelter connections.

CHAPTER V

CONCLUSION AND RECOMMENDATIONS

5.1 Conclusion

The ALGOR FEA package was found to be an effective tool to simulate the field conditions and analyze the slab for design loads. Since the software has been validated and used in the past to analyze and design storm shelters, it can be concluded that the results of slab analysis are reliable [14].

The results obtained can be used to make some useful conclusions that will help in developing stipulations for on-grade floor slabs of storm shelters. Emphasis has been given to all the structural details that ensure the capacity of slab to anchor the shelter against the design wind conditions. The following conclusions were made based on the results obtained:

1. Slabs modeled with box stiffness (i.e. the elements representing the footprints of shelter walls increased in stiffness to simulate a rigid body rotation of slab) provide a more realistic picture of the behavior of slabs anchoring the storm shelters, as compared to the slabs modeled with uniform stiffness. This is based on the fact that stiffness of the shelter walls is very high compared to that of the slab and thus the movement of shelter will govern the slab movement.
2. East-West wind direction governed the design of slab for all configurations, except for configuration C-1 of 8’x 8’x 8’ timber shelter for which North-South wind direction was found to be critical.

3. Slab offset beyond the shelter edge is a very important parameter that governs the design of slab. Configuration C-1 (offset on one side) was found to be the most critical case for slab design, followed by configuration C-3 (offset on two adjacent sides) and Configuration C-2 (offset on three sides).
4. Soil bearing capacity was found to have an appreciable impact on the flexural stresses in slab and thus its design. Modeling the soil as a bed of compressive springs is a conservative approach, as the resistance to overturning provided by suction is ignored.
5. The duration of the wind event (3-sec gust wind speed was considered), resistance offered by soil (suction), and dowel action (anchorage) of slab reinforcement are some of the factors that would increase resistance to overturning, but were not accounted for in the slab analysis. Thus the procedure adopted is a conservative approach to design slabs for storm shelters.
6. Aspect ratio of 1:2 (L:B; 4'x 8') was considered to be the limiting case. All cases having aspect ratio less than 1:2 have a greater tendency to overturn and thus require appropriate engineering analysis. All shelters were analyzed for a height of 8 ft. Height of shelter greatly affects the overturning of shelter.
7. HILTI heavy duty sleeve anchors (Anchor diameter – M8-12 mm bit; Embedment depth (h_{ef}) = 2 9/16" (65 mm) for 3000 psi concrete) has the required tensile strength (5165 lbf) to resist the maximum pullout force of 3640 lbf, as obtained for 8'x 4'x 8' timber shelter [1]. ACI 318-02 (RD.5.2.5) suggests no reduction of nominal concrete

breakout strength in tension of a single anchor if the edge distance provided to an anchor is greater than 1.5 h_{ef} (1.5 times the embedment depth).

It was observed that for configurations C-1 the slab shows maximum stress all along the leeward edge of the shelter. In the case of configurations C-2 and C-3 the maximum stress is located at the corners of the leeward edge of the shelter. The localized high stress at the corner is unlikely to cause catastrophic structural failure of the slab. Thus the stress values at the leeward edge of the slab were considered for determining failure in these cases. Based on the results discussed in chapter 4, the slab thickness and reinforcing steel bars for each configuration are suggested in the following table:

Table 5.1: Recommended design provisions for reinforced concrete slabs.

Shelter type	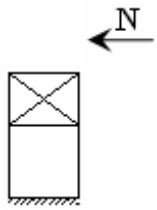		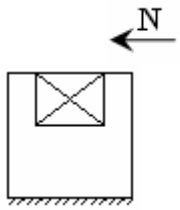		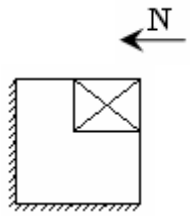	
	Config. C-1		Config. C-2		Config. C-3	
	Slab thk.	Steel	Slab thk.	Steel	Slab thk.	Steel
8'x 4'x 8' Timber steel shelters	5.5"	#5	3.5"	#4	5.5"	#5
8'x 8'x 8' Timber steel shelters	3.5"	#4	3.5"	#3	3.5"	#4
CMU/RC shelters (all sizes)	3.5"	#3	3.5"	#3	3.5"	#3
Note: The spacing of reinforcement is considered to be 12” o.c. in each direction.						

The #3 reinforcement was assumed to represent an existing slab used to support a storm shelter. In accordance with FEMA 320 the minimum size of steel suggested is #4.

The results of dead load calculations done for isolated storm shelters clearly indicate the importance of slab offset beyond shelter edges on all sides. An increase in slab offset causes an increase in dead weight, which in turn resists the overturning of shelter and thus ensures better anchorage. The recommended thickness of slab for isolated storm shelters (i.e., configuration C-4) is shown in Table 5.2.

Table 5.2: Recommended slab thickness for configuration C-4.

Shelter size, ft.	Offset (ft)	Slab Thickness	
8 x 4 x 8	1	2'-8"	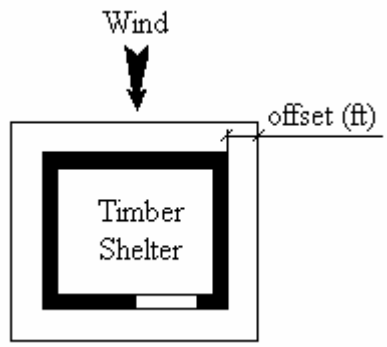
	2	1'-6"	
	3	10"	
	4	7"	
8 x 8 x 8	1	1'-6"	
	2	1'-0"	
	3	8"	
	4	6"	

It can be finally stated that the position of storm shelter on an existing floor slab is a very important factor that decides the performance of the floor to anchor the shelter. The design provisions given above provide the minimum requirements for the most critical slab-shelter configurations. Good engineering judgment and/or calculations are required to select a particular configuration and to ensure that all requirements are met.

5.2 Recommendations

The following points are recommended for future work on concrete floor slabs that support storm shelters:

1. The shelter and slab if modeled together can help in understanding the influence of shelter movement on the slab. This will help in ascertaining the stiffness of slab at the shelter footprints.
2. Nonlinear analysis can be carried out in order to determine the ultimate inelastic capacity of a reinforced concrete slab for storm shelters.
3. Soil-structure interaction can be achieved in a more accurate manner using the nonlinear response of soil to the applied loading. A parametric analysis can be carried out on different types of soil, using such a model. The model can also incorporate soil suction.
4. Full-scale tests should be performed to validate the analytical procedure.

REFERENCES

(1) WERC. *Design of Residential Shelters from Extreme Winds – A report submitted to Greenhorne & O'Mara,Inc*, Wind Engineering Research Center, Texas Tech University, Lubbock, TX, 1998.

(2) Simiu, E. and Scanlan, R.H. *Wind Effects on Structures: An Introduction to Wind Engineering*, New York: Wiley, 1986.

(3) Holmes, J.D. *Wind Loading of Structures*, London; New York: Spon Press, 2001.

(4) FEMA 361. *Design and Construction Guidance for Community Shelters*, Federal Emergency Management Agency, Washington, DC, 2000.

(5) FEMA 320. *Taking Shelter from the Storm: Building a Safe Room inside your House*, Federal Emergency Management Agency, Washington, DC, 2004.

(6) Kiesling, E.W. and Goolsby, D.E. *In-Home Shelters from Extreme Winds*, Civil Engineering, Vol.44, September 1974.

(7) Waller, J.E. and Kiesling, E.W. *Building Codes and Storm Shelter Safety*, The Building Safety Journal, August 2003.

(8) NSSA. *National Storm Shelter Association-Standard for the Design, Construction and Performance of Shelters*, Wind Engineering Research Center, Texas Tech University, Lubbock, TX, 2001.

(9) ACI 318. *Building Code Requirements for Structural Concrete (318-02) and Commentary (318-02)*, American Concrete Institute, Farmington Hill, MI.

(10) ASCE 7-02. *Minimum Design Loads for Buildings and Other Structures*, ASCE Standards, American Society of Civil Engineers, New York, NY.

(11) WERC. *A Summary Report on Debris Impact Testing at Texas Tech University*, Wind Engineering Research Center, Texas Tech University, Lubbock, TX, 2003.

(12) Pierce, B. *Full-Scale Test of an Aboveground Storm Shelter*, Master's thesis, Department of Civil Engineering, Texas Tech University, Lubbock, TX, August 2001.

(13) Shamsan, S.A.S. *Structural Analysis of Aboveground Storm Shelters*, Master's thesis, Department of Civil Engineering, Texas Tech University, Lubbock, TX, December 2002.

(14) Ahmed, M.A.Z. *Testing and Analyzing a Concrete Masonry Unit (CMU) Shelter*, Master's thesis, Department of Civil Engineering, Texas Tech University, Lubbock, TX, August 2003

(15) Qiao, L. *Analyzing Reinforced Concrete Shelters*, Master's thesis, Department of Civil Engineering, Texas Tech University, Lubbock, TX, December 2003.

(16) Davidson J. *Size Limits for Timber Storm Shelters*, Master's thesis, Department of Civil Engineering, Texas Tech University, Lubbock, TX, August 2004.

(17) MacGregor, J.G. *Reinforced Concrete Mechanics and Design*, Upper Saddle River, New Jersey: Prentice-Hall, Inc., 1997.

(18) Park, R. and Gamble, W.L. *Reinforced Concrete Slabs*, New York: Wiley, 2000.

(19) WERC, *A recommendation for an Enhanced Fujita Scale (EF-Scale) – A report submitted to The National Weather Service*, Wind Engineering Research Center, Texas Tech University, Lubbock, TX, 1998.

(20) Bowles, J.E. *Foundation Analysis and Design*, New York: McGraw-Hill, 1996; p 501-506.

(21) MSJC. *Building Code Requirements for Masonry Structures (ACI 530-02/ASCE 5-02/TMS 402-02)*, Masonry standards joint committee, 2002; p C-12.

(22) Senkiw, G.A. and Lancelot, H.B. *Anchors in Concrete - Design and Behavior*, Detroit, Mich. (P.O. Box 19150, Redford Station, Detroit 48219) : American Concrete Institute, 1991; p 1-18.

(23) ALGOR (Version 15.0) [Computer software]. ALGOR. Inc., Pittsburg, PA, 2004.

(24) Bambili galleries. http://www.bambili.com/b_gallery/view_pic_id.asp?pic_id=26543

(25) National Severe Storms Laboratory (NSSL) Collection. http://www.photolib.noaa.gov/nssl/nssl0064.htm

(26) Chuck Doswell's Thoughts after 03 May 1999 http://webserv.chatsystems.com/~doswell/OKC_may3rd/OKC_thoughts2.html

APPENDIX A

MATERIAL PROPERTIES

Material Properties

Auxiliary units: $ksf := 1000 \cdot \frac{lbf}{ft^2}$ $kN := 1000 \cdot N$

(1) *Concrete*:

Mass density: $\rho_c := 2.25 \cdot 10^{-4} \frac{lbm}{in^3}$

Weight density: $\gamma_c := \rho_c \cdot (386.4) \cdot 12^3$ $\gamma_c = 150 \frac{lbf}{ft^3}$

Compressive strength: $f'_c := 3000 \cdot psi$

Modulus of elasticity: $E_c := 57000\sqrt{f'_c \cdot psi}$ $E_c = 3.12 \times 10^6\ psi$

Modulus of rupture: $f_r := 7.5 \cdot \sqrt{f'_c \cdot psi}$ $f_r = 410.8\,psi$

Poisson's ratio: $\nu_c := 0.15$

Shear modulus of elasticity: $G_c := \frac{E_c}{2 \cdot (1 + \nu_c)}$ $G_c = 1357399\,psi$

(2) *CMU*:

Mass density: $\rho_{cmu} := 1.872 \cdot 10^{-4} \frac{lbm}{in^3}$

Weight density: $\gamma_{cmu} := \rho_{cmu} \cdot (386.4) \cdot 12^3$ $\gamma_{cmu} = 125 \frac{lbf}{ft^3}$

Compressive strength: $f'_{cmu} := 1500 \cdot psi$

Modulus of elasticity: $E_{cmu} := 900 \cdot f'_{cmu}$ $E_{cmu} = 1.35 \times 10^6\ psi$

Poisson's ratio: $\nu_{cmu} := 0.15$

Shear modulus of elasticity: $G_{cmu} := \frac{E_{cmu}}{2 \cdot (1 + \nu_{cmu})}$ $G_{cmu} = 586957\,psi$

(3) *Soil*:

Minimum soil bearing capacity: $q_{all} := \begin{pmatrix} 1500 \\ 2000 \\ 20000 \end{pmatrix} \cdot \frac{lbf}{ft^2}$

Factor of safety: $SF := 2$

Modulus of subgrade reaction: $k_s := \frac{12}{ft} \cdot q_{all} \cdot SF$ $\quad k_s = \begin{pmatrix} 20.8 \\ 27.8 \\ 277.8 \end{pmatrix} \frac{lbf}{in^3}$ $\quad k_s = \begin{pmatrix} 5655 \\ 7540 \\ 75402 \end{pmatrix} \frac{kN}{m^3}$

Finite element area: $A := (4 \cdot in) \cdot (4 \cdot in)$

Soil stiffness: $k_{spring} := k_s \cdot A$ $\quad k_{spring} = \begin{pmatrix} 333 \\ 444 \\ 4444 \end{pmatrix} \frac{lbf}{in}$

(4) *Timber-steel walls*:

(a) Mass and Weight density(Walls):

Shelter dimensions under consideration: $B := 8 \cdot ft$ $\quad h := 8 \cdot ft$

Mass density of timber shelter:

Consider a 16in. panel of timber wall (Two 3/4" plywood sheets and 14 ga steel sheet supported by Two 2"x4" wood studs (structural framing lumber)).

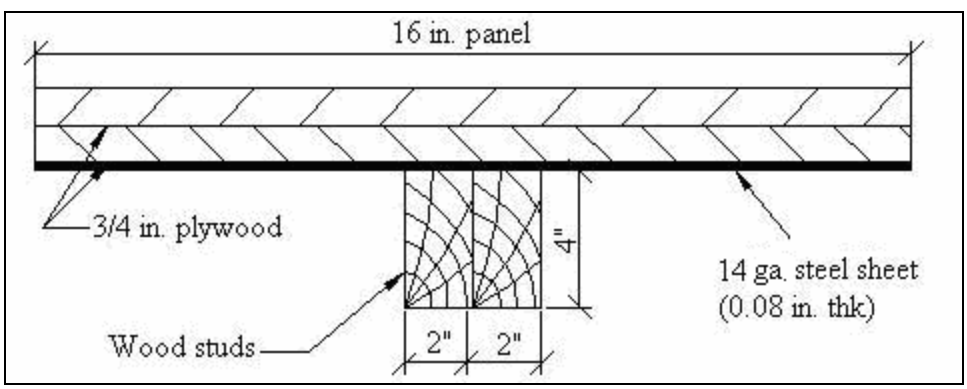

Figure A.1: Sectional view of timber-steel wall.

Density of steel: $\rho_{st} := 7850 \cdot \frac{kg}{m^3}$ $\gamma_{st} := \rho_{st} \cdot g$ $\gamma_{st} = 490.059 \frac{lbf}{ft^3}$

Weight of plywood (3/4"): $\gamma_{pl} := 2.2 \cdot \frac{lbf}{ft^2}$

Density of wood stud: $\rho_{stud} := 450 \cdot \frac{kg}{m^3}$ $\gamma_{stud} := \rho_{stud} \cdot g$ $\gamma_{stud} = 28.093 \frac{lbf}{ft^3}$

Panel length & No.(Panels): $l_p := 16 \cdot in$ $n_p := \frac{B}{l_p}$ $n_p = 6$

Thickness of plywood: $t_{pl} := 2 \cdot \left(\frac{3}{4} \cdot in\right)$

Thickness of steel: $t_{st} := 0.0781 \cdot in$

Area of 2x4 wood studs: $A_{stud} := 2 \cdot (2 \cdot in \cdot 4 \cdot in)$

Volume of the panel: $V_p := \left(l_p \cdot h \cdot t_{pl}\right) + \left(A_{stud} \cdot h\right) + \left(l_p \cdot h \cdot t_{st}\right)$

$V_p = 2.292 ft^3$

Mass of the panel: $M_p := 2 \cdot \frac{\gamma_{pl}}{g} \cdot \left(l_p \cdot h\right) + \rho_{stud} \cdot \left(A_{stud} \cdot h\right) + \rho_{st} \cdot \left(l_p \cdot h \cdot t_{st}\right)$

$M_p = 105.926 lb$

Density of the panel: $\rho_p := \frac{M_p}{V_p}$ $\rho_p = 740.4 \frac{kg}{m^3}$

$\gamma_p := \rho_p \cdot g$ $\gamma_p = 46.2 \frac{lbf}{ft^3}$

Equivalent Model properties:

Equivalent model thickness: $t_{mod} := 1 \cdot in$

Equivalent model volume: $V_{mod} := B \cdot h \cdot t_{mod}$ $\quad V_{mod} = 5.3\,ft^3$

Actual model volume: $V_a := V_p \cdot n_p$ $\quad V_a = 13.75\,ft^3$

Density of the model: $\rho_{mod} := \frac{\rho_p \cdot V_a}{V_{mod}}$ $\quad \rho_{mod} = 1908.86\,\frac{kg}{m^3}$

$\gamma_{mod} := \rho_{mod} \cdot g$ $\quad \gamma_{mod} = 119\,\frac{lbf}{ft^3}$

Mass density of the model: $\rho_{mod} = 1.78617 \times 10^{-4}\,\frac{\frac{lbf \cdot s^{2\times10^0}}{in}}{in^{3\times10^0}}$

(5) *Timber-steel roof*:

(b) *Mass and Weight density(Roof)*:

Shelter dimensions under consideration: $B := 8 \cdot ft$ $\quad L := 4 \cdot ft$

Mass density of timber shelter:

Consider a 16in. panel of timber roof (Two 3/4" plywood sheets and 14 ga steel sheet supported by one 2"x6" wood studs (structural framing lumber)).

Density of steel, $\rho_{st} := 7850 \cdot \frac{kg}{m^3}$ $\quad \gamma_{st} := \rho_{st} \cdot g$ $\quad \gamma_{st} = 490.1\,\frac{lbf}{ft^3}$

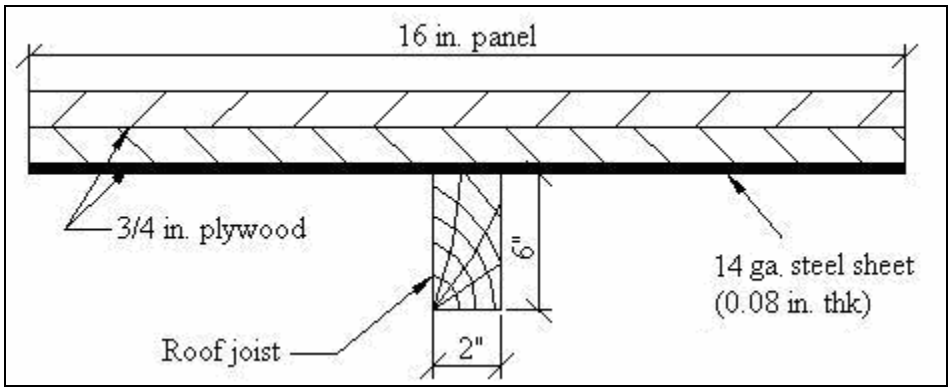

Figure A.2: Sectional view of timber-steel roof.

Weight of plywood (3/4"), $\gamma_{pl} := 2.2 \cdot \frac{lbf}{ft^2}$

Density of wood stud, $\rho_{stud} := 450 \cdot \frac{kg}{m^3}$ $\gamma_{stud} := \rho_{stud} \cdot g$ $\gamma_{stud} = 28.093 \frac{lbf}{ft^3}$

Panel length & No.(Panels), $l_p := 16 \cdot in$ $n_p := \frac{B}{l_p}$ $n_p = 6$

Thickness of plywood, $t_{pl} := 2 \cdot \left(\frac{3}{4} \cdot in\right)$

Thickness of steel, $t_{st} := 0.0781 \cdot in$

Area of 2x6 wood studs, $A_{stud} := (2 \cdot in \cdot 6 \cdot in)$

Volume of the panel, $V_p := (l_p \cdot L \cdot t_{pl}) + (A_{stud} \cdot L) + (l_p \cdot L \cdot t_{st})$

$V_p = 1.035 ft^3$

Mass of the panel, $M_p := 2 \cdot \frac{\gamma_{pl}}{g} \cdot (l_p \cdot L) + \rho_{stud} \cdot (A_{stud} \cdot L) + \rho_{st} \cdot (l_p \cdot L \cdot t_{st})$

$M_p = 49.841 lb$

Density of the panel, $\rho_p := \frac{M_p}{V_p}$ $\rho_p = 771.599 \frac{kg}{m^3}$

$\gamma_p := \rho_p \cdot g$ $\gamma_p = 48.169 \frac{lbf}{ft^3}$

Equivalent model thickness, $t_{mod} := 1 \cdot in$

Equivalent model volume, $V_{mod} := B \cdot L \cdot t_{mod}$ $V_{mod} = 2.7\, ft^3$

Actual model volume, $V_a := V_p \cdot n_p$ $V_a = 6.2\, ft^3$

Density of the model, $\rho_{mod} := \frac{\rho_p \cdot V_a}{V_{mod}}$ $\rho_{mod} = 1796.36 \frac{kg}{m^3}$

$\gamma_{mod} := \rho_{mod} \cdot g$ $\gamma_{mod} = 112 \frac{lbf}{ft^3}$

$$\rho_{mod} = 1.6809 \times 10^{-4} \frac{\frac{lbf \cdot s^{2 \times 10^0}}{in}}{in^{3 \times 10^0}}$$

APPENDIX B

WIND LOAD CALCULATIONS

Wind Load Calculations ASCE 7 - 02 (MWFRS) - 8 x 4 x 8

Dimensions of shelter: $B := 8 \cdot ft$ $h := 8 \cdot ft$ $L := 4 \cdot ft$ $\theta := 0 \cdot deg$

Enclosure type of building: $Enc := PE$ ..... Enter: FE / PE / O

Basic wind speed: $V := 250 \cdot mph$

Importance factor: $I := 1.0$

Exposure Category: Exposure C

Velocity pressure exposure coefficient: $K_z := 0.85$

Topographic factor: $K_{zt} := 1.0$

Gust effect factor: $G := \max(0.85, G_{for})$ $G = 0.905$

Velocity pressure: $q_z = 136 \frac{lbf}{ft^2}$

Internal Pressure coefficients: $GC_{pi} = \begin{pmatrix} 0.55 \\ -0.55 \end{pmatrix}$

External Pressure coefficients: $C_{p\_ww} := 0.8$ $C_{p\_sw} := -0.7$ $C_{p\_lw} = -0.5$

$C_{p\_rf\_1} = -1.3$ $C_{p\_rf\_2} = -0.7$

$C_{p\_rf\_3} = -0.7$ $C_{p\_rf\_4} = -0.7$

Design Wind loads:

Windward Wall

$p_{ww} = \begin{pmatrix} 0.165 \\ 1.203 \end{pmatrix} psi$

Leeward Wall

$p_{lw} = \begin{pmatrix} -0.947 \\ 0.092 \end{pmatrix} psi$

Sideward Walls

$p_{sw} = \begin{pmatrix} -1.118 \\ -0.079 \end{pmatrix} psi$

Roof 0 to h/2

$p_{rf1} = \begin{pmatrix} -1.631 \\ -0.592 \end{pmatrix} psi$

Roof h/2 to h

$p_{rf2} = \begin{pmatrix} -1.118 \\ -0.079 \end{pmatrix} psi$

Roof h to 2h

$p_{rf3} = \begin{pmatrix} -1.118 \\ -0.079 \end{pmatrix} psi$

Roof > 2h

$p_{rf4} = \begin{pmatrix} -1.118 \\ -0.079 \end{pmatrix} psi$

Nomencleature :
ww = Windward Wall; lw = Leeward Wall; sw = Side Wall; Enc = Enclosure; PE = Partially Enclosed Building; FE = Fully Enclosed Building; O = Open Building; A, A' = Aspect Ratios.

Wind Load Calculations ASCE 7 - 02 (MWFRS) - 4 x 8 x 8

Dimensions of shelter: $B := 4 \cdot ft$ $h := 8 \cdot ft$ $L := 8 \cdot ft$ $\theta := 0 \cdot deg$

Enclosure type of building: $Enc := PE$ ..... Enter: FE / PE / O

Basic wind speed: $V := 250 \cdot mph$

Importance factor: $I := 1.0$

Exposure Category: Exposure C

Velocity pressure exposure coefficient: $K_z := 0.85$

Topographic factor: $K_{zt} := 1.0$

Gust effect factor: $G := \max(0.85, G_{for})$ $G = 0.90837$

Velocity pressure: $q_z = 136 \frac{lbf}{ft^2}$

Internal Pressure coefficients: $GC_{pi} = \begin{pmatrix} 0.55 \\ -0.55 \end{pmatrix}$

External Pressure coefficients: $C_{p\_ww} := 0.8$ $C_{p\_sw} := -0.7$ $C_{p\_lw} = -0.3$

$C_{p\_rf\_1} = -1.3$ $C_{p\_rf\_2} = -0.7$

$C_{p\_rf\_3} = -0.7$ $C_{p\_rf\_4} = -0.7$

Design Wind loads:

Windward Wall

$p_{ww} = \begin{pmatrix} 0.167 \\ 1.206 \end{pmatrix} psi$

Leeward Wall

$p_{lw} = \begin{pmatrix} -0.777 \\ 0.262 \end{pmatrix} psi$

Sideward Walls

$p_{sw} = \begin{pmatrix} -1.12 \\ -0.081 \end{pmatrix} psi$

Roof 0 to h/2

$p_{rf1} = \begin{pmatrix} -1.635 \\ -0.596 \end{pmatrix} psi$

Roof h/2 to h

$p_{rf2} = \begin{pmatrix} -1.12 \\ -0.081 \end{pmatrix} psi$

Roof h to 2h

$p_{rf3} = \begin{pmatrix} -1.12 \\ -0.081 \end{pmatrix} psi$

Roof > 2h

$p_{rf4} = \begin{pmatrix} -1.12 \\ -0.081 \end{pmatrix} psi$

Nomencleature :
ww = Windward Wall; lw = Leeward Wall; sw = Side Wall; Enc = Enclosure; PE = Partially Enclosed Building; FE = Fully Enclosed Building; O = Open Building; A, A' = Aspect Ratios.

Wind Load Calculations ASCE 7 - 02 (MWFRS) - 8 x 8 x 8

Dimensions of shelter: $B := 8 \cdot ft$ $h := 8 \cdot ft$ $L := 8 \cdot ft$ $\theta := 0 \cdot deg$

Enclosure type of building: $Enc := PE$ ..... Enter: FE / PE / O

Basic wind speed: $V := 250 \cdot mph$

Importance factor: $I := 1.0$

Exposure Category: Exposure C

Velocity pressure exposure coefficient: $K_z := 0.85$

Topographic factor: $K_{zt} := 1.0$

Gust effect factor: $G := \max(0.85, G_{for})$ $G = 0.90525$

Velocity pressure: $q_z = 136 \frac{lbf}{ft^2}$

Internal Pressure coefficients: $GC_{pi} = \begin{pmatrix} 0.55 \\ -0.55 \end{pmatrix}$

External Pressure coefficients: $C_{p\_ww} := 0.8$ $C_{p\_sw} := -0.7$ $C_{p\_lw} = -0.5$

$C_{p\_rf\_1} = -1.3$ $C_{p\_rf\_2} = -0.7$

$C_{p\_rf\_3} = -0.7$ $C_{p\_rf\_4} = -0.7$

Design Wind loads:

Windward Wall

$p_{ww} = \begin{pmatrix} 0.165 \\ 1.203 \end{pmatrix} psi$

Leeward Wall

$p_{lw} = \begin{pmatrix} -0.947 \\ 0.092 \end{pmatrix} psi$

Sideward Walls

$p_{sw} = \begin{pmatrix} -1.118 \\ -0.079 \end{pmatrix} psi$

Roof 0 to h/2

$p_{rf1} = \begin{pmatrix} -1.631 \\ -0.592 \end{pmatrix} psi$

Roof h/2 to h

$p_{rf2} = \begin{pmatrix} -1.118 \\ -0.079 \end{pmatrix} psi$

Roof h to 2h

$p_{rf3} = \begin{pmatrix} -1.118 \\ -0.079 \end{pmatrix} psi$

Roof > 2h

$p_{rf4} = \begin{pmatrix} -1.118 \\ -0.079 \end{pmatrix} psi$

Nomencleature :
ww = Windward Wall; lw = Leeward Wall; sw = Side Wall; Enc = Enclosure; PE = Partially Enclosed Building; FE = Fully Enclosed Building; O = Open Building; A, A' = Aspect Ratios.

APPENDIX C

HAND CALCULATIONS

Hand Calculations - CMU and RC shelters

8' x 4' x 8' RC shelter:-

Material density: $\gamma_{wall} := 150 \cdot \frac{lbf}{ft^3}$ $\gamma_{roof} := 150 \cdot \frac{lbf}{ft^3}$

Shelter dimensions: $B := 8 \cdot ft$ $L := 4 \cdot ft$ $h := 8 \cdot ft$ $t_w := 6 \cdot in$ $t_r := 4 \cdot in$

$L_{rf\_f} := 4 \cdot ft$ $L_{rf\_m} := 0 \cdot ft$ $L_{rf\_b} := 0 \cdot ft$ $A_{door} := 21 \cdot ft^2$

Wind Loads: $p_{ww} := 0.165 \cdot psi$ $p_{lw} := 0.947 \cdot psi$ $p_{sw} := 1.118 \cdot psi$

$p_{r\_f} := 1.631 \cdot psi$ $p_{r\_m} := 0 \cdot psi$ $p_{r\_b} := 1.118 \cdot psi$

Load Factor: For wind loads, $F_{wl} := 1.2$ For dead loads, $F_{dl} := 0.9$

Weight of shelter: $W := -\left[F_{dl} \cdot \left[\left[2(B + L) \cdot h \cdot t_w - A_{door} \cdot t_w\right] \cdot \gamma_{wall} + \left(L \cdot B \cdot t_r\right) \cdot \gamma_{roof}\right]\right]$

$W = -12983 lbf$

Uplift due to wind load: $P_{rf\_up} := F_{wl} \cdot \left[B \cdot L_{rf\_f} \cdot \left(p_{r\_f}\right) + (B) \cdot L_{rf\_m} \cdot \left(p_{r\_m}\right) + (B) \cdot L_{rf\_b} \cdot \left(p_{r\_b}\right)\right]$

$P_{rf\_up} = 9019 lbf$

Net load on slab: $P_{slab} := P_{rf\_up} + W$

$P_{slab} = -3964 lbf$

Similarly we obtain the loads on slab for RC and CMU shelters as shown in table 4.1.

Hand Calculations - Slab thickness for 8'x4'x8' Timber shelters - (C-4)

Shelter dimensions $L := 4 \cdot ft$ $B := 8 \cdot ft$

Loads on slab

Folowing the same procedure as shown above for CMU and RC shelters we get,

Weight of (8'x4'x8') timber shelter: $W := 1795 \cdot lbf$

Uplift due to wind load on roof of (8'x4'x8') timber shelter: $P_{up} := 9019 \cdot lbf$

Overturning moment caused by wind loads: $M := 49191.3 lbf \cdot ft$

Slab thickness calculations

Slab density: $\gamma_{conc} := 150 \cdot \frac{lbf}{ft^3}$

For x ft offset all around the shelter

Slab offset beyond shelter edge: $x := 1.0 \cdot ft$

Slab dimensions: $L_{slab} := L + 2 \cdot (x)$

$B_{slab} := B + 2 \cdot (x)$

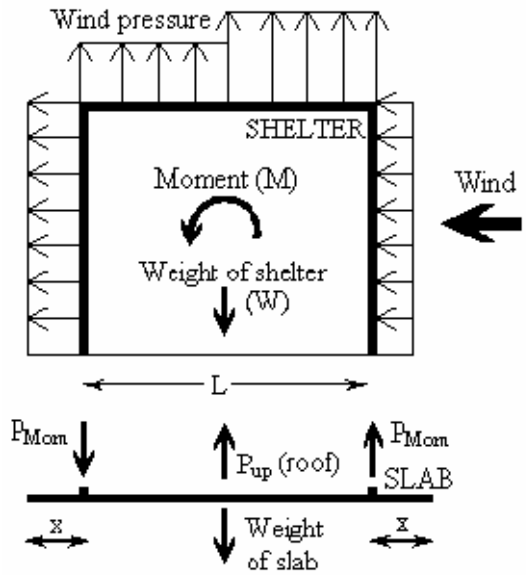

Figure A.3: Loads on slab (8'x4'x8' shelter)

Taking the moment about the leeward edge of slab we get,

Slab thickness required to prevent uplift:

$$t_{slab} := \frac{P_{up} \cdot \left(x + \frac{L}{2}\right) + M - W \cdot \left(x + \frac{L}{2}\right)}{L_{slab} \cdot B_{slab} \cdot \gamma_{conc} \cdot \left(x + \frac{L}{2}\right)}$$

$t_{slab} = 31.49in$

Offset (ft)	Slab Thickness, (in)
1	32.0
2	17.0
3	10.0
4	7.0

Hand Calculations - Slab thickness for 8'x8'x8' Timber shelters - (C-4)

Shelter dimensions $L := 8 \cdot ft$ $B := 8 \cdot ft$

Loads on slab

Folowing the same procedure as shown above for CMU and RC shelters we get,

Weight of (8'x8'x8') timber shelter: $W := 2635 \cdot lbf$

Uplift due to wind load on roof of (8'x8'x8') timber shelter: $P_{up} := 15201 \cdot lbf$

Overturning moment caused by wind loads: $M := 49191.3 lbf \cdot ft$

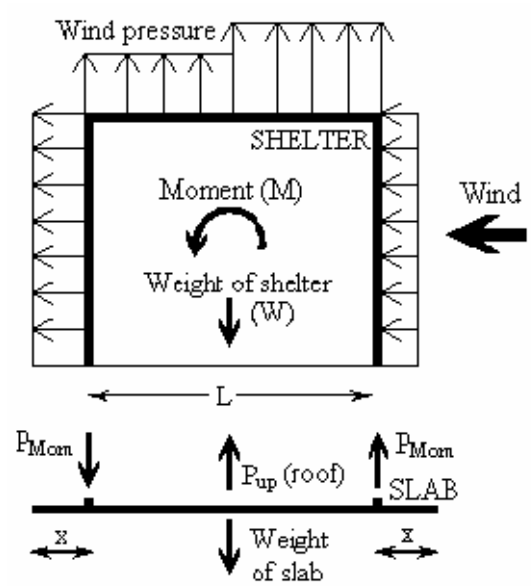

Figure A.4: Loads on slab (8'x8'x8' shelter)

Slab thickness calculations

Slab density: $\gamma_{conc} := 150 \cdot \frac{lbf}{ft^3}$

For x ft offset all around the shelter

Slab offset beyond shelter edge: $x := 4.0 \cdot ft$

Slab dimensions: $L_{slab} := L + 2 \cdot (x)$

$B_{slab} := B + 2 \cdot (x)$

Taking the moment about the leeward edge of slab we get,

Slab thickness required to prevent uplift:

$$t_{slab} := \frac{P_{up} \cdot \left(x + \frac{L}{2}\right) + M - W \cdot \left(x + \frac{L}{2}\right)}{L_{slab} \cdot B_{slab} \cdot \gamma_{conc} \cdot \left(x + \frac{L}{2}\right)}$$

$t_{slab} = 5.85 in$

Offset (ft)	Slab Thickness, (in)
1	18.0
2	12.0
3	8.0
4	6.0

APPENDIX D

SHELTER SUPPORT REACTIONS

Table D.1: Timber shelter 8'x4'x8' (Wind direction - East to West).

Constraints (Anchor #)	Model Node #	Shelter support reactions (lbf)		
		R_X	R_Y	R_Z
7	1	1570.00	351.00	2620.00
6	5	1600.00	-194.00	809.00
5	9	1470.00	66.00	-958.00
4	13	1080.00	-983.00	-3140.00
8	20	28.40	-747.00	2050.00
3	21	-115.00	-51.50	-1320.00
9	28	56.50	-194.00	1810.00
2	29	234.00	-263.00	67.20
10	36	77.80	148.00	1820.00
1	37	1050.00	-591.00	727.00
11	41	80.50	481.00	2010.00
12	45	82.90	1000.00	2440.00
17	47	139.00	73.50	307.00
13	52	1520.00	-521.00	2990.00
14	56	1110.00	246.00	804.00
15	60	724.00	125.00	-1610.00
16	64	1600.00	1050.00	-4200.00
Sum of forces:-		**12308.10**	**-4.00**	**7226.20**

Table D.2: Timber shelter 8'x4'x8' (Wind direction - West to East).

Constraints (Anchor #)	Model Node #	Shelter support reactions (lbf)		
		R_X	R_Y	R_Z
7	1	-1080.00	-224.00	-1930.00
6	5	-1450.00	-81.20	-86.80
5	9	-1320.00	-255.00	1560.00
4	13	-1570.00	653.00	3260.00
8	20	-74.60	523.00	-1280.00
3	21	-21.20	-854.00	2320.00
9	28	-318.00	168.00	-1010.00
2	29	-50.40	-333.00	1560.00
10	36	-374.00	-33.50	-971.00
1	37	-207.00	-422.00	542.00
11	41	-320.00	-224.00	-1100.00
12	45	-80.90	-544.00	-1440.00
17	47	-110.00	1950.00	2750.00
13	52	-1030.00	307.00	-2060.00
14	56	-1260.00	73.50	-76.20
15	60	-1310.00	228.00	1700.00
16	64	-1710.00	-928.00	3460.00
Sum of forces:-		**-12286.10**	**3.80**	**7198.00**

Table D.3: Timber shelter 8'x4'x8' (Wind direction -North to South).

Constraints (Anchor #)	Model Node #	Shelter support reactions (lbf)		
		R_X	R_Y	R_Z
7	1	921.00	297.00	1400.00
6	5	132.00	326.00	1140.00
5	9	434.00	461.00	960.00
4	13	-840.00	-11.50	662.00
8	20	-270.00	387.00	897.00
3	21	-25.00	85.30	427.00
9	28	-465.00	577.00	560.00
2	29	321.00	25.10	46.10
10	36	-503.00	626.00	303.00
1	37	1340.00	129.00	-177.00
11	41	-421.00	603.00	49.90
12	45	-148.00	474.00	-274.00
17	47	350.00	691.00	1020.00
13	52	102.00	549.00	-811.00
14	56	-158.00	-81.60	-301.00
15	60	-293.00	-57.60	-81.90
16	64	-474.00	140.00	-8.49
Sum of forces:-		**3.00**	**5219.70**	**5811.61**

Table D.4: Timber shelter 8'x4'x8' (Wind direction -South to North).

Constraints (Anchor #)	Model Node #	Shelter support reactions (lbf)		
		R_X	R_Y	R_Z
7	1	349.00	-561.00	-615.00
6	5	236.00	138.00	-497.00
5	9	106.00	262.00	-536.00
4	13	-493.00	-740.00	-871.00
8	20	-205.00	-266.00	-278.00
3	21	-72.60	-479.00	432.00
9	28	-447.00	-282.00	45.50
2	29	305.00	-263.00	1630.00
10	36	-505.00	-277.00	361.00
1	37	1310.00	-1060.00	1470.00
11	41	-443.00	-272.00	675.00
12	45	-217.00	-220.00	991.00
17	47	460.00	-516.00	-1020.00
13	52	631.00	-346.00	1230.00
14	56	-363.00	-274.00	1130.00
15	60	23.90	-269.00	994.00
16	64	-674.00	210.00	670.00
Sum of forces:-		**1.30**	**-5215.00**	**5811.50**

Table D.5: CMU shelter 8'x4'x8' (Dead load only).

Constraints (Anchor #)	Model Node #	Shelter support reactions (lbf)		
		R_X	R_Y	R_Z
7	1	-148.00	-169.00	-933.00
6	5	16.70	5.96	-949.00
5	9	-7.56	6.45	-988.00
4	13	170.00	-207.00	-1060.00
8	20	4.59	-0.68	-938.00
3	21	-6.64	-30.40	-1060.00
9	28	-3.22	-0.67	-950.00
2	29	1.49	-67.30	-1080.00
10	36	-2.38	11.30	-965.00
1	37	8.10	207.00	-541.00
11	41	-2.43	21.10	-979.00
12	45	7.04	13.10	-1000.00
17	47	3.00	-137.00	-355.00
13	52	-181.00	188.00	-1050.00
14	56	-1.83	-7.25	-1010.00
15	60	-19.60	-5.26	-999.00
16	64	163.00	171.00	-961.00
Sum of forces:-		**1.26**	**-0.65**	**-15818.00**

Table D.6: Timber shelter 8'x8'x8' (Wind direction - East to West).

Constraints (Anchor #)	Model Node #	Shelter support reactions (lbf)		
		R_X	R_Y	R_Z
10	1	596.0	602.0	1520.0
9	5	861.0	-287.0	1060.0
8	9	1040.0	-448.0	722.0
7	13	1080.0	-444.0	433.0
6	17	996.0	-307.0	97.8
5	21	703.0	70.3	-421.0
4	25	264.0	-507.0	-1430.0
11	32	185.0	-473.0	1340.0
3	33	-176.0	-619.0	-236.0
12	40	166.0	-161.0	1260.0
2	41	199.0	-550.0	629.0
13	48	176.0	49.7	1270.0
1	49	957.0	-734.0	852.0
14	53	187.0	266.0	1360.0
15	57	232.0	605.0	1560.0
23	59	-220.0	1550.0	2500.0
16	64	703.0	-740.0	1820.0
17	68	910.0	261.0	1270.0
18	72	1060.0	475.0	802.0
19	76	967.0	529.0	343.0
20	80	621.0	468.0	-273.0
21	84	-170.0	178.0	-1320.0
22	88	958.0	215.0	-2590.0
Sum of forces:-		**12295.00**	**-1.00**	**12568.80**

Table D.7: Timber shelter 8'x8'x8' (Wind direction - West to East).

Constraints (Anchor #)	Model Node #	Shelter support reactions (lbf)		
		R_X	R_Y	R_Z
10	1	-532.0	195.0	-776.0
9	5	-811.0	-63.9	-120.0
8	9	-914.0	-386.0	281.0
7	13	-921.0	-496.0	602.0
6	17	-888.0	-484.0	907.0
5	21	-772.0	-316.0	1230.0
4	25	-501.0	523.0	1520.0
11	32	27.9	108.0	-332.0
3	33	-141.0	-911.0	1510.0
12	40	-241.0	4.5	-171.0
2	41	-117.0	-501.0	1510.0
13	48	-302.0	-15.1	-128.0
1	49	-374.0	-726.0	901.0
14	53	-239.0	-21.3	-163.0
15	57	33.6	-76.6	-293.0
23	59	-536.0	2270.0	3420.0
16	64	-390.0	-209.0	-639.0
17	68	-568.0	60.4	-43.0
18	72	-663.0	389.0	350.0
19	76	-758.0	504.0	644.0
20	80	-966.0	502.0	817.0
21	84	-1340.0	345.0	750.0
22	88	-383.0	-693.0	767.0
Sum of forces:-		**-12295.50**	**1.95**	**12544.00**

Table D.8: Timber shelter 8'x8'x8' (Wind direction - North to South).

Constraints (Anchor #)	Model Node #	Shelter support reactions (lbf)		
		R_X	R_Y	R_Z
10	1	887.0	671.0	2060.0
9	5	-369.0	187.0	1750.0
8	9	25.7	192.0	1550.0
7	13	288.0	232.0	1470.0
6	17	533.0	288.0	1470.0
5	21	831.0	411.0	1560.0
4	25	-1040.0	316.0	1530.0
11	32	-307.0	805.0	1410.0
3	33	32.1	501.0	501.0
12	40	-473.0	1040.0	897.0
2	41	355.0	282.0	-737.0
13	48	-482.0	1100.0	463.0
1	49	1400.0	798.0	-1060.0
14	53	-367.0	1080.0	22.5
15	57	-35.0	919.0	-516.0
23	59	29.2	1950.0	3090.0
16	64	10.7	690.0	-1320.0
17	68	174.0	-37.0	-630.0
18	72	-19.2	264.0	-240.0
19	76	-147.0	358.0	-21.8
20	80	-358.0	338.0	25.4
21	84	-771.0	92.6	-226.0
22	88	-197.0	-188.0	-491.0
Sum of forces:-		**0.50**	**12289.60**	**12557.10**

Table D.9: Timber shelter 8'x8'x8' (Wind direction - South to North).

Constraints (Anchor #)	Model Node #	Shelter support reactions (lbf)		
		R_X	R_Y	R_Z
10	1	933.0	315.0	1760.0
9	5	-452.0	355.0	1460.0
8	9	-67.4	518.0	1290.0
7	13	219.0	600.0	1260.0
6	17	527.0	617.0	1350.0
5	21	962.0	586.0	1580.0
4	25	-1240.0	401.0	1900.0
11	32	-445.0	961.0	1150.0
3	33	147.0	1170.0	603.0
12	40	-563.0	1100.0	748.0
2	41	412.0	831.0	-784.0
13	48	-566.0	1080.0	421.0
1	49	1530.0	1110.0	-1300.0
14	53	-462.0	979.0	83.8
15	57	-185.0	751.0	-350.0
23	59	413.0	566.0	858.0
16	64	202.0	846.0	-1030.0
17	68	-55.8	-198.0	-366.0
18	72	-193.0	-67.6	2.8
19	76	-206.0	-27.5	248.0
20	80	-166.0	-25.4	438.0
21	84	-91.9	-134.0	588.0
22	88	-645.0	-39.5	636.0
Sum of forces:-		**6.90**	**12294.00**	**12546.57**

Table D.10: CMU shelter 8'x8'x8' (Dead load only).

Constraints (Anchor #)	Model Node #	Shelter support reactions (lbf)		
		R_X	R_Y	R_Z
10	1	-165.00	-167.00	-987.00
9	5	8.44	8.61	-977.00
8	9	6.06	-2.97	-983.00
7	13	17.40	-3.53	-997.00
6	17	24.90	-2.32	-1020.00
5	21	8.32	10.10	-1060.00
4	25	187.00	-229.00	-1160.00
11	32	8.63	5.67	-979.00
3	33	-12.80	-54.20	-1140.00
12	40	-2.97	3.07	-987.00
2	41	-1.06	-94.70	-1170.00
13	48	-3.39	14.90	-1000.00
1	49	18.90	213.00	-574.00
14	53	-1.97	24.60	-1020.00
15	57	12.00	14.00	-1060.00
23	59	-9.26	-102.00	-282.00
16	64	-198.00	192.00	-1130.00
17	68	-8.60	-11.40	-1060.00
18	72	-22.10	3.54	-1040.00
19	76	-17.80	6.56	-1030.00
20	80	-13.50	8.56	-1030.00
21	84	-20.90	-4.84	-1050.00
22	88	185.00	167.00	-1050.00
Sum of forces:-		**-0.70**	**-0.35**	**-22786.00**

APPENDIX E

FLEXURAL STRENGTH OF CONCRETE SLAB

Flexural capacity of slab element (3.5"slab with # 3 bars)

Dimensions slab element (4 in.mesh element):

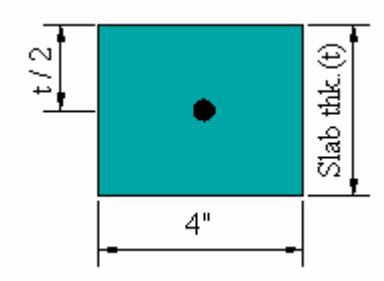

$t := 3.5 \cdot in$ $\quad b := 4 \cdot in$ $\quad y_t := \frac{t}{2}$

Material properties of the section:

Concrete: $f'_c := 3000 \cdot psi$ $\quad E_c := 3.122 \cdot 10^6 \cdot psi$

$\phi f_r := 0.9 \cdot (410) \cdot psi$ $\quad \phi f_r = 369 psi$

Steel: $f_y := 60000 \, psi$ $\quad E_s := 29000 \, 10^3 \cdot psi$

Modular ratio, $n := \frac{E_s}{E_c}$ $\quad n = 9.289$

Gross moment of inertia of the section:

$I_g := \frac{t^3 \cdot b}{12}$ $\quad I_g = 14.3 in^4$

Factored Nominal moment carrying capacity of the section:

Area of steel in the element, $A_s := \frac{0.11 \cdot in^2 \cdot b}{12 \cdot in}$ $\quad A_s = 0.037 in^2$ $\quad k := 1000 \cdot lbf$

Neutral axis, $a := \frac{f_y \cdot (A_s)}{0.85 \cdot f'_c \cdot b}$ $\quad a = 0.216 in$

Factored nominal moment carrying capacity, $\phi M_n := 0.9 \cdot \left[A_s \cdot f_y \cdot \left(y_t - \frac{a}{2} \right) \right]$ $\quad \phi M_n = 3.251 k \cdot in$

Factored Cracking moment carrying capacity of the section:

$\phi M_{cr} := \phi f_r \cdot \left(\frac{I_g}{y_t} \right)$ $\quad \phi M_{cr} = 3.013 k \cdot in$

Moment of inertia after cracking:

Steel area transformed to concrete area $\quad A_{s\_trans} := A_s \cdot n$ $\quad A_{s\_trans} = 0.341 in^2$

Assuming the neurtral axis to be at a depth x from the top of slab, we find x using moment of area expression as follows,

$$b \cdot \frac{x^2}{2} = A_{s\_trans} \cdot (y_t - x)$$

Solving for x we get,

$$x := \begin{bmatrix} \frac{1}{2\cdot b}\cdot\left[-2\cdot A_{s\_trans} + 2\cdot\left(A_{s\_trans}^{2} + 2\cdot b\cdot A_{s\_trans}\cdot y_t\right)^{\frac{1}{2}}\right] \\ \frac{1}{2\cdot b}\cdot\left[-2\cdot A_{s\_trans} - 2\cdot\left(A_{s\_trans}^{2} + 2\cdot b\cdot A_{s\_trans}\cdot y_t\right)^{\frac{1}{2}}\right] \end{bmatrix} \qquad x = \begin{pmatrix} 0.467 \\ -0.638 \end{pmatrix} in$$

Cracked moment of inertia, $I_{cr} := \frac{b\cdot\left(x_0\right)^3}{3} + A_{s\_trans}\cdot\left(y_t - x_0\right)^2$ $\qquad I_{cr} = 0.696in^4$

<u>Effective moment of inertia of cracked section (Equation 3.3)</u>:

$$I_{eff} := \left(\frac{\phi M_{cr}}{\phi M_n}\right)^3\cdot I_g + \left[1 - \left(\frac{\phi M_{cr}}{\phi M_n}\right)^3\right]\cdot I_{cr} \qquad I_{eff} = 11.52in^4$$

<u>Distance of maximum tensile stress in a cracked section</u>:

Equivalent thickness of cracked section, $h_{eq\_cr} := \left(\frac{I_{eff}\cdot 12}{b}\right)^{\frac{1}{3}}$ $\qquad h_{eq\_cr} = 3.257in$

Distance of maximum tensile stress, $y_{t\_cr} := \frac{h_{eq\_cr}}{2}$ $\qquad y_{t\_cr} = 1.629in$

<u>Reserve stress in reinforced concrete section after cracking</u>:

$$\phi\sigma_{res} := \frac{\phi M_n - \phi M_{cr}}{I_{eff}}\cdot y_{t\_cr} \qquad \phi\sigma_{res} = 33.6psi$$

<u>Limit stress in reinforced concrete section</u>:

$$\phi\sigma_{lim} := \phi f_r + \phi\sigma_{res} \qquad \phi\sigma_{lim} = 402.6psi$$

<u>Percentage reserve strength in reinforced concrete section after cracking</u>:

$$\%Reserve := \frac{\phi\sigma_{res}}{\phi f_r}\cdot 100 \qquad \%Reserve = 9.118$$

Flexural capacity of slab element (3.5"slab with # 4 bars)

Dimensions slab element (4 in.mesh element):

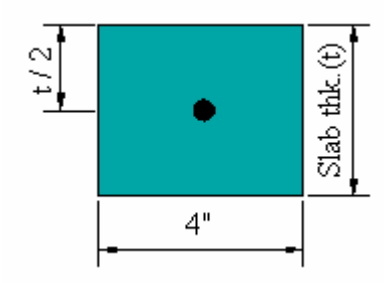

$t := 3.5 \cdot in$ $\quad b := 4 \cdot in$ $\quad y_t := \frac{t}{2}$

Material properties of the section:

Concrete: $f'_c := 3000 \cdot psi$ $\quad E_c := 3.122 \cdot 10^6 \cdot psi$

$\phi f_r := 0.9 \cdot (410) \cdot psi$ $\quad \phi f_r = 369 psi$

Steel: $f_y := 60000 \, psi$ $\quad E_s := 29000 \, 10^3 \cdot psi$

Modular ratio, $n := \frac{E_s}{E_c}$ $\quad n = 9.289$

Gross moment of inertia of the section:

$I_g := \frac{t^3 \cdot b}{12}$ $\quad I_g = 14.3 in^4$

Factored Nominal moment carrying capacity of the section:

Area of steel in the element, $A_s := \frac{0.2 \cdot in^2 \cdot b}{12 \cdot in}$ $\quad A_s = 0.067 in^2$ $\quad k := 1000 \cdot lbf$

Neutral axis, $a := \frac{f_y \cdot (A_s)}{0.85 \cdot f'_c \cdot b}$ $\quad a = 0.392 in$

Factored nominal moment carrying capacity, $\phi M_n := 0.9 \cdot \left[A_s \cdot f_y \cdot \left(y_t - \frac{a}{2} \right) \right]$ $\quad \phi M_n = 5.594 k \cdot in$

Factored Cracking moment carrying capacity of the section:

$\phi M_{cr} := \phi f_r \cdot \left(\frac{I_g}{y_t} \right)$ $\quad \phi M_{cr} = 3.013 k \cdot in$

Moment of inertia after cracking:

Steel area transformed to concrete area $\quad A_{s\_trans} := A_s \cdot n$ $\quad A_{s\_trans} = 0.619 in^2$

Assuming the neurtral axis to be at a depth x from the top of slab, we find x using moment of area expression as follows,

$$b \cdot \frac{x^2}{2} = A_{s\_trans} \cdot (y_t - x)$$

Solving for x we get,

$$x := \begin{bmatrix} \frac{1}{2\cdot b}\cdot\left[-2\cdot A_{s\_trans} + 2\cdot\left(A_{s\_trans}^{2} + 2\cdot b\cdot A_{s\_trans}\cdot y_t\right)^{\frac{1}{2}}\right] \\ \frac{1}{2\cdot b}\cdot\left[-2\cdot A_{s\_trans} - 2\cdot\left(A_{s\_trans}^{2} + 2\cdot b\cdot A_{s\_trans}\cdot y_t\right)^{\frac{1}{2}}\right] \end{bmatrix} \qquad x = \begin{pmatrix} 0.597 \\ -0.907 \end{pmatrix} in$$

Cracked moment of inertia, $I_{cr} := \frac{b\cdot\left(x_0\right)^3}{3} + A_{s\_trans}\cdot\left(y_t - x_0\right)^2$ $\qquad I_{cr} = 1.107in^4$

<u>Effective moment of inertia of cracked section (Equation 3.3)</u>:

$$I_{eff} := \left(\frac{\phi M_{cr}}{\phi M_n}\right)^3\cdot I_g + \left[1 - \left(\frac{\phi M_{cr}}{\phi M_n}\right)^3\right]\cdot I_{cr} \qquad I_{eff} = 3.168in^4$$

<u>Distance of maximum tensile stress in a cracked section</u>:

Equivalent thickness of cracked section, $h_{eq\_cr} := \left(\frac{I_{eff}\cdot 12}{b}\right)^{\frac{1}{3}}$ $\qquad h_{eq\_cr} = 2.118in$

Distance of maximum tensile stress, $y_{t\_cr} := \frac{h_{eq\_cr}}{2}$ $\qquad y_{t\_cr} = 1.059in$

<u>Reserve stress in reinforced concrete section after cracking</u>:

$$\phi\sigma_{res} := \frac{\phi M_n - \phi M_{cr}}{I_{eff}}\cdot y_{t\_cr} \qquad \phi\sigma_{res} = 862.7psi$$

<u>Limit stress in reinforced concrete section</u>:

$$\phi\sigma_{lim} := \phi f_r + \phi\sigma_{res} \qquad \phi\sigma_{lim} = 1231.7psi$$

<u>Percentage reserve strength in reinforced concrete section after cracking</u>:

$$\%Reserve := \frac{\phi\sigma_{res}}{\phi f_r}\cdot 100 \qquad \%Reserve = 233.803$$

APPENDIX F

PULLOUT STRENGTH OF CONCRETE SLAB

Concrete strength at the connections

Concrete breakout strength in tension:

Compressive strength of concrete, $f'_c := 3000 \cdot psi$

Slab thickness, $t := 3.5 \cdot in$

Effective anchor embedment depth, $h_{ef} := 2.125 \cdot in$ ..... (FEMA 320)

Diameter of the bolt, $d_o := 0.5 \cdot in$ ..... assumed as per FEMA 320.

Smallest edge distance, $c_1 := 4 \cdot in$ ..... assumed as per FEMA 320.

Basic concrete breakout strength of a single cast in anchor in tension in cracked concrete, ACI-318 (Eq. D-7):

$N_b := 24 \cdot \sqrt{f'_c \cdot psi} \cdot h_{ef}^{1.5} \cdot in^{0.5}$ $\qquad N_b = 4072 lbf$

Nominal concrete breakout strength in tension of single anchor, ACI-318 (Eq.D-4):

$N_{cb} = \Psi_2 \cdot \Psi_3 \cdot N_b$ ..... (for isolated anchor bolt $A_N = A_{No}$)

where,

Ψ_2 = Modification factor for edge dist.,

For anchor near edge, $\Psi_{2\_edge} := \begin{cases} 1 & \text{if } c_1 \geq 1.5 \cdot h_{ef} \\ 0.7 + 0.3 \dfrac{c_1}{1.5 \cdot h_{ef}} & \text{if } c_1 < 1.5 \cdot h_{ef} \end{cases}$ $\qquad \Psi_{2\_edge} = 1$

For anchor away from edge, $\Psi_2 := 1.0$

Ψ_3 = Modification factor for edge distance, $\Psi_{3\_crack} := 1.0$ $\qquad \Psi_{3\_uncrack} := 1.25$

<u>Anchor bolt at edge</u>:

For cracked concrete, $N_{cb\_crack} := \Psi_{2\_edge} \cdot \Psi_{3\_crack} \cdot N_b$ $\qquad N_{cb\_crack} = 4072 lbf$

For uncracked concrete, $N_{cb\_uncrack} := \Psi_{2\_edge} \cdot \Psi_{3\_uncrack} \cdot N_b$ $\qquad N_{cb\_uncrack} = 5090 lbf$

<u>Anchor bolt away from edge</u>:

For cracked concrete, $N'_{cb\_crack} := \Psi_2 \cdot \Psi_{3\_crack} \cdot N_b$ $\qquad N'_{cb\_crack} = 4072 lbf$

For uncracked concrete, $N'_{cb\_uncrack} := \Psi_2 \cdot \Psi_{3\_uncrack} \cdot N_b$ $\qquad N'_{cb\_uncrack} = 5090 lbf$

PERMISSION TO COPY

In presenting this thesis in partial fulfillment of the requirements for a master's degree at Texas Tech University or Texas Tech University Health Sciences Center, I agree that the Library and my major department shall make it freely available for research purposes. Permission to copy this thesis for scholarly purposes may be granted by the Director of the Library or my major professor. It is understood that any copying or publication of this thesis for financial gain shall not be allowed without my further written permission and that any user may be liable for copyright infringement.

Agree (Permission is granted.)

NAVIN KISHINCHAND GALANI 06/05/2005

Student Signature Date

Disagree (Permission is not granted.)

Student Signature Date